Armoduro®

A SAUDI BRAND FOR

PIPING PRODUCTS

THAT SYMBOLIZES EXCELLENCE

Piping products crafted with strict standards and carefully inspected for perfection, tailored to suit a promising market.

PIPES | TUBES |BW FITTINGS | FLANGES | FORGED FITTINGS

www.armoduro.com

THE

BRAND

ARMODURO® is a registered trademark in Kingdom of Saudi Arabia and owned by KADEN Trading Company. It was created to be a real representation of quality, trust and reliability for the products associated with it.

ARMODURO® products are manufactured by renowned international mills, adhering to the most stringent quality standards. These products undergo rigorous testing by independent third-party companies throughout the production process to ensure the exceptional quality of the end product.

ARMODURO® offers an extensive selection of metallic piping products that have been carefully chosen to meet the specific needs and preferences of our valued clients. Our range includes various shapes and alloys to ensure we can cater to a wide range of requirements.

Armoduro®

DELIVERY:

Your investments hold immense importance to us, and we firmly believe in addressing your needs without delay. By working closely with our customers, we aim to simplify the supply chain, eliminate any unnecessary process delays, and ensure the prompt delivery of your products within the shortest possible time.

QUALITY ASSURANCE

The **ARMODURO®** brand guarantees the quality of any product bearing its mark, thanks to rigorous testing and inspection conducted by independent third-party companies. These comprehensive tests encompass the following areas to ensure top-notch quality assurance:

- ✓ **Factory Audit**
- ✓ **Chemical Testing (W/R)**
- ✓ **Dimensional Check**
- ✓ **Surface Condition Check**
- ✓ **Tools calibration check**
- ✓ **Mechanical Testing (W/R)**
- ✓ **PMI (Positive Material Identification)**
- ✓ **Packing Check**

We guarantee that after completing this procedure, you will receive a premium quality material that has been carefully produced and thoroughly inspected to eliminate any possible defects or quality concerns in the final product. You can trust in our promise to deliver only the best.

Armoduro®

PIPES

ARMODURO® offers an extensive range of seamless and welded pipes, which are ideal for petrochemical, chemical, industrial and water applications. Our stainless steel and carbon steel pipes undergo strict chemical compositions and heat treatment process resulting in its high strength and fatigue resistance character.

Process	:	Seamless and Welded (EFW/ERW/SAW)
Manufacturing Standards	:	ASTM, ASME/EN/DIN
Size Range	:	1/4" to 72"
Schedules	:	Sch10 up to Sch160/XXS
Ends Finish	:	Beveled/Plain/Grooved/Threaded
Lengths	:	SRL 5-8m, DRL 9-13m & Cut Lengths

GRADES:

Stainless Steel	:	A312, A358 - 304/L, 316/L, 321
Carbon Steel	:	API5L, A53, A106, Gr B, Gr A, Gr X42, Gr X52, Gr X60, A333
Duplex & Super Duplex	:	A790 - UNS S31803, UNS S32750, UNS S32760, F53, F55
Nickel & High Temperature	:	310, 904L, UNS N08825, UNS N06625, UNS N08020, Titanium Gr2

PIPE MANUFACTURING PROCESSES

Seamless pipes & tubes (Mannesmann process)

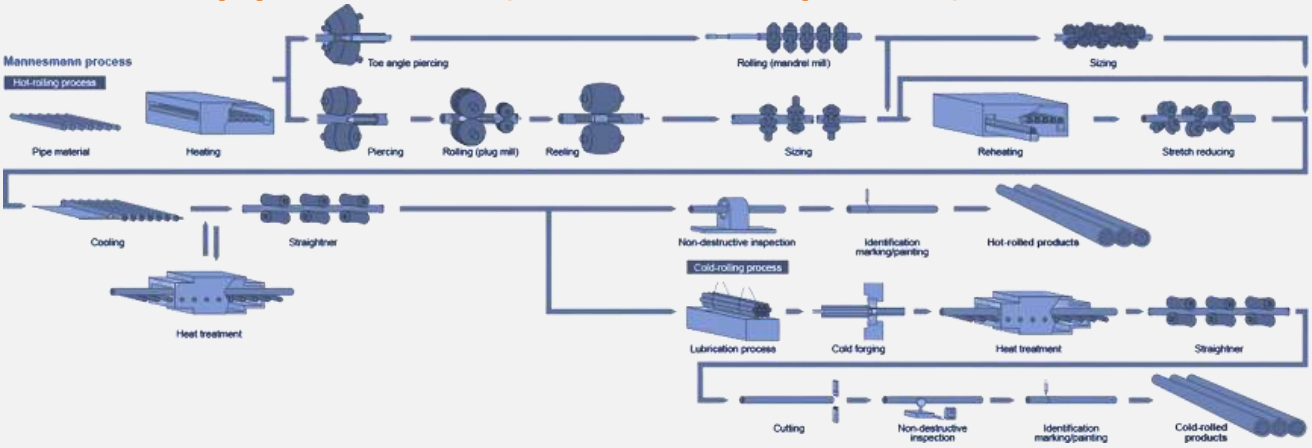

Seamless pipe pipes & tubes (hot extrusion · hot hollow forged)

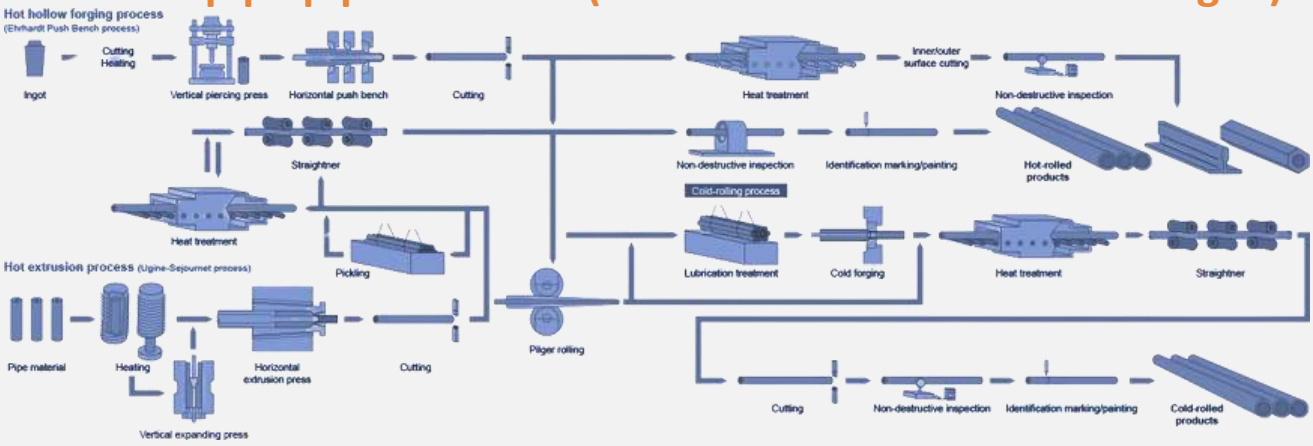

Electric resistance-welded pipes & tubes

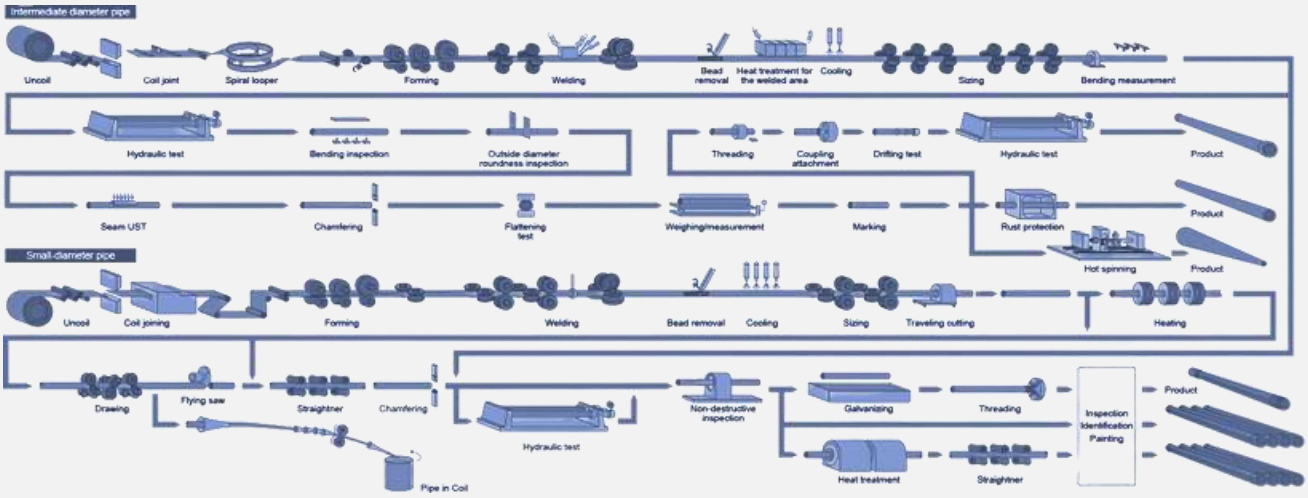

Armoduro®

PIPE MANUFACTURING PROCESSES

Hot electric resistance-welded pipes & tubes

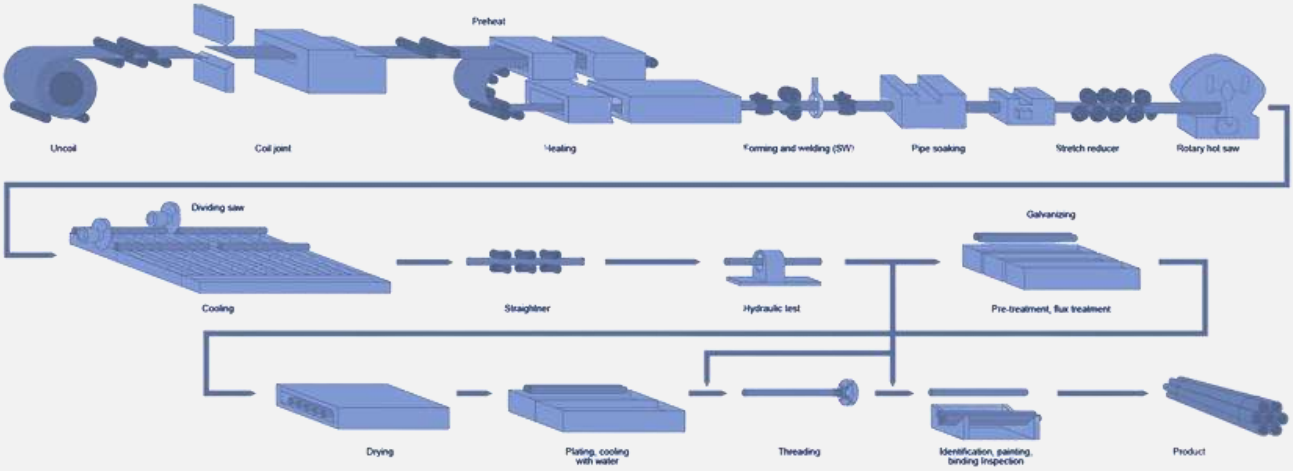

Arc-welded pipes & tubes (SAWH pipe (by Spiral process))

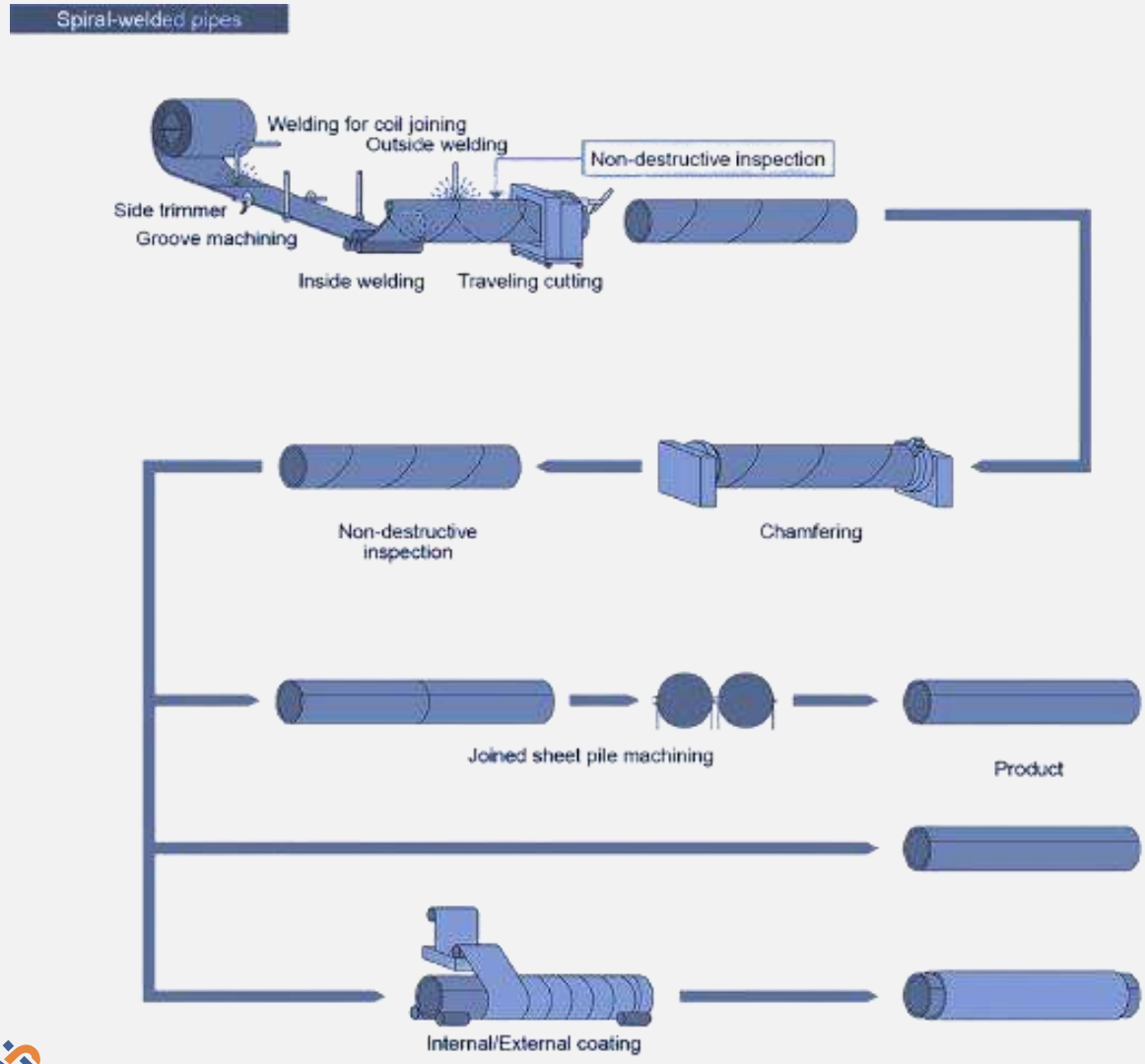

Dimensions of Welded and Seamless Steel Pipe
ASME B 36.10 / B 36.19

		OD = mm			Wall Thickness = mm				Weight = Kg/Mtr						Stainless Steel			
Nominal Pipe Size (Inches)	OD (mm)	10	20	30	STD	40	60	XS	80	100	120	140	160	XXS	5S	10S	40S	80S
1/8	10.30				1.73 0.37	1.73 0.37		2.41 0.47	2.41 0.47							1.24 0.28	1.73 0.36	2.41 0.48
1/4	13.70				2.24 0.63	2.24 0.63		3.02 0.80	3.02 0.80							1.65 0.51	2.24 0.64	3.02 0.82
3/8	17.10				2.31 0.84	2.31 0.84		3.20 1.10	3.20 1.10							1.65 0.64	2.31 0.86	3.20 1.12
1/2	21.30				2.77 1.27	2.77 1.27		3.73 1.62	3.73 1.62				4.78 1.95	7.47 2.55	1.65 0.82	2.11 1.01	2.77 1.30	3.73 1.65
3/4	26.70				2.87 1.69	2.87 1.69		3.91 2.20	3.91 2.20				5.56 2.90	7.82 3.64	1.65 1.04	2.11 1.31	2.87 1.71	3.91 2.24
1	33.40				3.38 2.50	3.38 2.50		4.55 3.24	4.55 3.24				6.35 4.24	5.45 9.09	1.65 1.33	2.77 2.13	3.38 2.55	4.55 3.29
1 1/4	42.20				3.56 3.39	3.56 3.39		4.85 4.47	4.85 4.47				6.35 5.61	9.70 7.77	1.65 1.68	2.77 2.76	3.56 3.46	4.85 4.56
1 1/2	48.30				3.68 4.05	3.68 4.05		5.08 5.41	5.08 5.41				7.14 7.25	10.15 9.56	1.65 1.95	2.77 3.17	3.68 4.13	5.08 5.51
2	60.30				3.91 5.44	3.91 5.44		5.54 7.48	5.54 7.48				8.74 11.11	11.07 13.44	1.65 2.44	2.77 4.01	3.91 5.54	5.54 7.63
2 1/2	73.00				5.16 8.63	5.16 8.63		7.01 11.41	7.01 11.41				9.53 14.92	14.02 20.39	2.11 3.77	3.05 5.36	5.16 8.81	7.01 11.64
3	88.90				5.49 11.29	5.49 11.29		7.62 15.27	7.62 15.27				11.13 21.35	15.24 27.68	2.11 4.60	3.05 6.59	5.49 11.52	7.62 15.59
3 1/2	101.60				5.74 13.57	5.74 13.57		8.08 18.63	8.08 18.63						2.11 5.29	3.05 7.55	5.74 13.84	8.08 19.01
4	114.30				6.02 16.07	6.02 16.07		8.56 22.32	8.56 22.32		11.13 28.32		13.49 33.54	17.12 41.03	2.11 5.96	3.05 8.52	6.02 16.40	8.56 22.77
5	141.30				6.55 21.77	6.55 21.77		9.53 30.97	9.53 30.97		12.70 40.28		15.88 49.11	19.05 57.43	2.77 9.67	3.40 11.82	6.55 22.20	9.53 31.59
6	168.30				7.11 28.26	7.11 28.26		10.97 42.56	10.97 42.56		14.27 54.20		18.26 67.56	21.95 79.22	2.77 11.55	3.40 14.13	7.11 28.83	10.97 43.42
8	219.10		6.35 33.31	7.04 36.81	8.18 42.55	8.18 42.55	10.31 53.08	12.70 64.64	12.70 64.64	15.09 75.92	18.26 90.44	20.62 100.92	23.01 111.27	22.23 107.92	2.77 15.09	3.76 20.37	8.18 43.39	12.70 65.95
10	273.10		6.35 41.77	7.80 51.03	9.27 60.31	9.27 60.31	12.70 81.55	12.70 81.55	15.09 96.01	18.26 114.75	21.44 133.06	25.40 155.15	28.58 172.33	25.40 155.15	3.40 23.08	4.19 28.34	9.27 61.52	12.70 83.19
12	323.90		6.35 49.73	8.38 65.20	9.53 73.88	10.31 79.73	14.27 108.96	97.46 12.70	17.48 132.08	21.44 159.91	25.40 186.97	28.58 208.14	33.32 238.76	25.40 186.97	3.96 31.89	4.57 36.73	9.53 75.52	12.70 99.43
14	355.60	6.35 54.69	67.90 7.92	9.53 81.33	9.53 81.33	11.13 94.55	15.09 126.71	12.70 107.39	19.05 158.10	23.83 194.96	27.79 224.65	31.75 253.56	35.71 281.70		3.96 35.06	4.78 42.14		
16	406.40	6.35 62.64	7.92 77.83	9.53 93.27	9.53 93.27	12.70 123.30	16.66 160.12	12.70 123.30	21.44 203.53	26.19 245.56	30.96 286.64	36.53 333.19	40.49 365.35		4.19 42.41	4.78 48.26		
18	457.00	6.35 70.57	7.92 87.71	11.13 122.38	9.53 105.16	14.27 155.80	19.05 205.74	12.70 139.15	23.88 254.55	29.36 309.62	34.93 363.56	39.67 408.26	45.24 459.37		4.19 47.77	4.78 60.46		
20	508.00	6.35 78.55	9.53 117.15	12.70 155.12	9.53 117.15	15.09 183.42	20.62 247.83	12.70 155.12	26.19 311.17	32.54 381.53	38.10 441.49	44.45 508.11	50.01 564.81		4.78 60.46	5.54 70.00		
22	559.00	86.54 6.35	9.53 129.13	12.70 171.09	9.53 129.13		22.23 294.25	12.70 171.09	28.58 373.83	34.93 451.42	41.28 527.02	47.63 600.63	53.98 672.26		4.78 66.57	5.54 77.06		
24	610.00	6.35 94.53	9.53 141.12	14.27 209.64	9.53 141.12	17.48 255.41	24.61 355.26	12.70 187.06	30.96 442.08	38.89 547.71	46.02 640.03	52.37 720.15	59.54 808.22		5.54 84.16	6.35 96.37		
26	660.00	7.92 127.36	12.70 202.72		9.53 152.87			12.70 202.72										
28	711.00	7.92 137.32	12.70 218.69	15.88 271.21	9.53 164.85			12.70 218.69										
30	762.00	7.92 147.28	12.70 234.67	15.88 292.18	9.53 176.84			12.70 234.67							6.35 120.72	7.92 150.36		
32	813.00	7.92 157.24	12.70 250.64	15.88 312.15	9.53 188.82	17.48 342.91		12.70 250.64										
34	864.00	7.92 167.20	12.70 266.61	15.88 332.12	9.53 200.31	17.48 364.90		12.70 266.61										
36	914.00	7.92 176.96	12.70 282.27	15.88 351.70	9.53 212.56	19.05 420.42		12.70 282.27										
38	965.00				9.53 224.54			12.70 298.24										
40	1016.00				9.53 236.53			12.70 314.22										
42	1067.00				9.53 248.52			12.70 330.19										
44	1118.00				9.53 260.50			12.70 346.16										
46	1168.00				9.53 272.25			12.70 351.82										
48	1219.00				9.53 284.24			12.70 377.79										

Std. = Standard Wall, XS = Extra Strong, XXS = Double Extra Strong

Armoduro®

Theoretical Bursting Pressure for Stainless Steel Pipes

STAINLESS STEEL PIPE THEORETICAL BURSTING PRESSURE									
		Schedule 5s		Schedule 10s		Schedule 40s		Schedule 80s	
Nominal I.P.S. (in.)	OD (in.)	Wall (in.)	Pressure (p.s.i.)	Wall (in.)	Pressure (p.s.i.)	Wall (in.)	Pressure (p.s.i.)	Wall (in.)	Pressure (p.s.i.)
1/8	0.405			0.049	18150	0.068	25175	0.095	35175
1/4	0.54			0.065	18050	0.088	24450	0.119	33050
3/8	0.675			0.065	14450	0.091	20225	0.126	28000
1/2	0.84	0.065	11600	0.083	14825	0.109	19475	0.147	26250
3/4	1.05	0.065	9275	0.083	11850	0.113	16150	0.154	22000
1	1.315	0.065	7425	0.109	12450	0.133	15175	0.179	20425
1 1/4	1.66	0.065	5875	0.109	9850	0.14	12650	0.191	17250
1 1/2	1.9	0.065	5125	0.109	8600	0.145	11450	0.2	15800
2	2.375	0.065	4100	0.109	6875	0.154	9750	0.218	13775
2 1/2	2.875	0.83	4325	0.12	6250	0.203	10600	0.276	14400
3	3.5	0.83	3550	0.12	5150	0.216	9250		
3 1/2	4	0.83	3100	0.12	4500	0.226	8475		
4	4.5	0.83	2750	0.12	4000	0.237	7900		
5	5.563	0.109	2950	0.134	3625	0.258	6950		
6	6.625	0.109	2475	0.134	3050	0.28	6350		
8	8.625	0.109	1900	0.148	2575	0.322	5600		
10	10.75	0.134	1875	0.165	2300	0.365	5100		
12	12.75	0.156	1825	0.18	2125	0.375	4400		
14	14	0.156	1675	0.188	2025				
16	16	0.165	1550	0.188	1775				
18	18	0.165	1375	0.188	1575				
20	20	0.188	1400	0.218	1625				
24	24	0.218	1375	0.25	1550				
30	30	0.25	1250	0.312	1550				

All Pressure Ratings are approximate and for illustration purposes only. Values are not Guaranteed or Warranted.

Std. = Standard Wall, XS = Extra Strong, XXS = Double Extra Strong

Armoduro®

TUBES

ARMODURO® presents an extensive selection of top-notch seamless stainless-steel tubes that are carefully crafted by leading mills worldwide. With its exceptional quality, it stands as the ultimate solution for critical applications such as heat exchangers, Oil & Gas, Chemical industry, and marine applications.

Manufacturing Standards	:	ASTM, ASME/EN/DIN, NACE
Process	:	Seamless and Welded
Size Range	:	1/16″ to 2″
Surface Finish	:	Pickled, Bright Annealed, Polished
Lengths	:	6m, SRL 5-8m and Coiled

GRADES:

Stainless Steel	:	A269, A789-304/304L, 316/316L, 321/321H, 317/317L
Copper	:	B-88, B-306 & B-280-TYPE K, TYPE L, TYPE M, TYPE DWV
Duplex & Super Duplex	:	DUPLEX 2205 (S31803) / DUPLEX 2304 / SUPER DUPLEX 2507 (S32750)
Nickel & High Temperature	:	ALLOY 20 / 200 / 201 / 276 / 400 / 600 / 625, Titanium Gr2

TUBES

Dimensions, and Pressure Ratings

METRIC SIZES:

Allowable working pressures are based on equations from ASME B31 .3 and ASME B31 .1 for EN ISO 1127 tubing (D4, T4 tolerance for 3 to 12 mm; D4, T3 tolerance 14 to 50 mm), using a stress value of 137 .8 MPa (20 000 psi) and tensile strength of 516 .4 MPa (74 900 psi).

Tube OD mm	Tube Wall mm	Weight kg/m	Working Pressure bar
3	0 .5	0 .021	330
	0 .7	0 .027	560
6	1 .0	0 .125	420
	1 .5	0 .169	710
8	1 .0	0 .175	310
	1 .5	0 .244	520
10	1 .0	0 .225	240
	1 .5	0 .319	400
12	1 .0	0 .275	200
	1 .5	0 .394	330
	2 .0	0 .500	470
16	1 .0	0 .375	140
	1 .5	0 .507	230
	2 .0	0 .651	330
18	1 .0	0 .425	120
	1 .5	0 .619	200
	2 .0	0 .801	290
20	2 .0	0 .901	260
22	2 .0	1 .00	230
25	2 .0	1 .15	200
	2 .5	1 .41	260

IMPERIAL SIZES

Allowable working pressures are calculated from an S value of 20 000 psi (137 .8 MPa) for ASTM A269 tubing at –20 to 100°F (–28 to 37°C), as listed in ASME B31 .3 and ASME B31 .1.

Tube OD in .	Tube Wall in .	Weight kg/m	Working Pressure psig
1/16	0 .014	0 .01	8 100
	0 .020	0 .01	12 000
1/8	0 .028	0 .04	8 500
	0 .035	0 .05	10 900
1/4	0 .035	0 .12	5 100
	0 .049	0 .16	7 500
	0 .065	0 .19	10 200
3/8	0 .035	0 .19	3 300
	0 .049	0 .25	4 800
	0 .065	0 .32	6 500
1/2	0 .035	0 .26	2 600
	0 .049	0 .35	3 700
	0 .065	0 .45	5 100
	0 .083	0 .55	6 700
5/8	0 .049	0 .45	2 900
	0 .065	0 .58	4 000
3/4	0 .049	0 .56	2 400
	0 .065	0 .71	3 300
1	0.049	0.75	1 840
	0.065	0.98	2 440
	0 .083	1 .20	3 100
1 1/4	0.095	1.78	2 800
	0.120	2.20	3 600
1 1/2	0.120	2.67	3 000
	0.134	2.95	3 400
2	0.134	4.03	2 500
	0.188	5.49	3 600

PRESSURE RATINGS AT ELEVATED TEMPERATURES

To determine elevated-temperature pressure ratings in accordance with B31 .3 and B31 .1, multiply the pressure ratings provided in the tables above by the factors in the table below .

Temperature		Material	
°F	°C	304, 304 / 304L	316, 316 / 316L
200	93	1 .00	1 .00
400	204	0 .93	0 .96
600	315	0 .82	0 .85
800	426	0 .76	0 .79
1000	537	0 .69	0 .76

Dual-certified grades 304 / 304L and 316 / 316L meet the requirements for the lower maximum carbon content of the L grades and for the higher minimum yield and tensile strength of the non-L grades .

BUTT WELD FITTINGS

At **ARMODURO®**, we offer a diverse collection of Buttweld fittings renowned for their superior quality. Our fittings come in various sizes and types, meticulously crafted from high-grade pipes. Each pipe undergoes rigorous inspection to verify its original properties, followed by precise fabrication and final inspection to ensure the utmost quality of the end product.

Standards:	:	ASME B16.9 – ASME B16.28 – ASME – B16.25 – MSS SP-75 – MSS SP-43, DIN 2605 – 2606 – 2615 – 2616
Process:	:	Seamless and Welded
Fitting Types:	:	45°/90°/180° LR or SR Elbows, Bends, Concentric Reducers, Eccentric Reducers, Equal Tees, Reducing Tees, Caps.
Size Range:	:	1/4" to 72"
Schedules:	:	Sch10 up to Sch160/XXS
Ends Finish:	:	Beveled/Plain

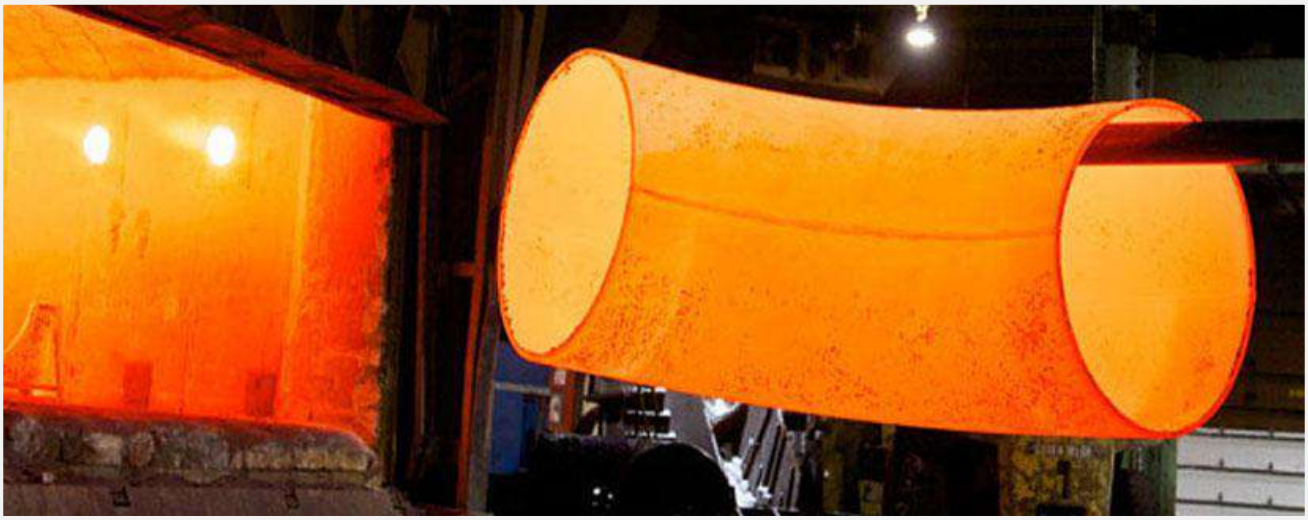

GRADES:

Stainless Steel	:	A312, A358 - 304/L, 316/L, 321
Carbon Steel	:	API5L, A53, A106, Gr B, Gr A, Gr X42, Gr X52, Gr X60, A333
Duplex & Super Duplex	:	A790 - UNS S31803, UNS S32750, UNS S32760, F53, F55
Nickel & High Temperature	:	310, 904L, UNS N08825, UNS N06625, UNS N08020, Titanium Gr2

BUTT WELD FITTINGS TYPES

A pipe fitting is defined as a part used in a piping system to change direction or function, which is mechanically joined to the system. Probably the simplest way to achieve this would be to bend the pipe in the direction required, but this process will stretch and thin the outer wall whilst thickening and wrinkling the inner wall. This results in flow resistance and accelerated wall erosion. A second method sometimes used is a miter joint, where pipes are cut to the correct angle and welded together to achieve the desired change.

A piping system using buttweld fittings has many advantages over other forms.

- Welding a fitting to the pipe means it is permanently leakproof.
- The continuous metal structure formed between pipe and fitting adds strength to the system.
- Smooth inner surface and gradual directional changes reduce pressure losses and turbulence and minimize the action of corrosion and erosion.
- A welded system utilizes a minimum of space.

90° Elbow

45° Elbow

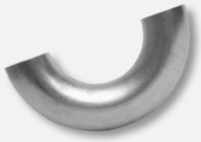

180° Return Bend

Bends (3D,4D,5D)

Equal Tee

Reducing Tee

Concentric Reducer

Eccentric Reducer

Equal Cross

Reducing Cross

End Cap

Stub End

Armoduro®

BUTT WELD FITTINGS TYPES

90° ELBOWS

The function of a 90° elbow is to change direction or flow in a piping system. Elbows are split into three groups which define the distance over which they change direction, expressed as a function of the distance from the center line of one end to the opposite face. This is known as the center to face distance and is equivalent to the radius through which the elbow is bent.

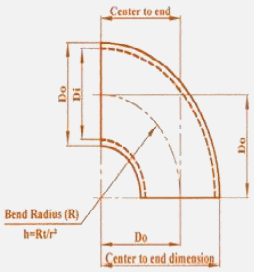

a. Short Radius Elbow

Long Radius Elbow

The most common is the long radius (L.R.) elbow where the center to face dimension is always 11/2 times the nominal pipe size of the elbow.

Short Radius Elbow

In this case the center to face dimension is the same as the nominal pipe size of the elbow.

Extra Long Radius Elbow

This is where the center to face dimension is longer than the standard long radius type. The most common of these is where the center to face dimension is three times the nominal size. i.e., 3D.

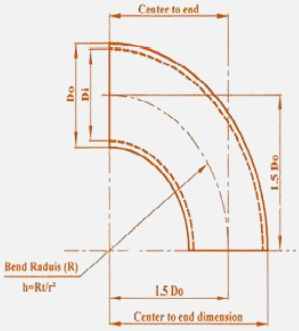

b. Long Radius Elbow

180° RETURN BENDS

The function of a 180° return bend is to change direction of flow through 180° and there are two basic types, long radius and short radius. Both types have a center-to-center dimension double the matching 90° elbows. The primary application for these fittings is in heater coils and heat exchangers, boilers etc.

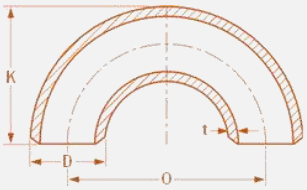

45° ELBOWS

The function of a 45° elbow is the same as a 90° elbow, but the measurement of dimensions, however, is 45° different to that of the90° elbow. The radius of a 45°elbow is the same as the radius of the 90° L.R. elbow where 'R' equals 1.5 D. However, the center to face dimension is not equivalent to the radius as in 90° L.R. elbows. This is measured from each face to the point of intersection of the center lines perpendicular to each other. This is due to the smaller degree of bend.

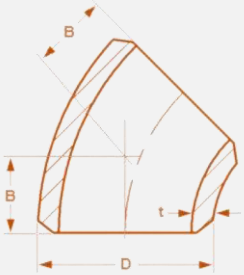

BUTT WELD FITTINGS TYPES

ECCENTRIC AND CONCENTRIC REDUCERS

The function of both types of reducer is to reduce the line from a larger to a smaller pipe size, this obviously results in an increased flow pressure. With the eccentric reducer the smaller outlet end is off center to the larger end enabling it to line up with one side of the inlet and not with the other.

The concentric reducer is so manufactured that both inlet and outlet ends are on a common center line. The concentric reducer is easier and less expensive to produce but does not allow quite the same versatility as the eccentric reducer. The lengths of both types are fixed by manufacturing standards.

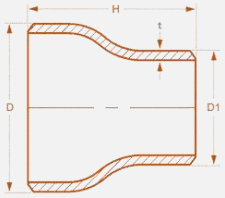

Reducer concentric

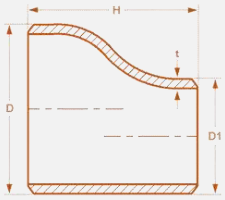

Reducer eccentric

EQUAL AND REDUCING TEES

The function of a tee is to permit flow at 90° to the main direction of flow. The main flow passes through the 'run' whilst the 90° outlet is known as the 'branch'. The equal tee is manufactured with all three outlets being the same size.

The reducing tee is manufactured with the branch outlet smaller than the run to obtain the desired flow and pressure through the system.

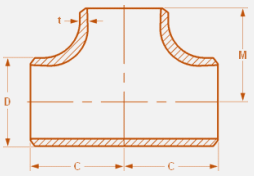

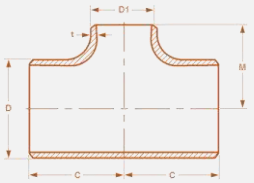

EQUAL AND REDUCING CROSSES

The function of a cross is similar to that of a tee with the exception of providing two 90° outlets opposite each other.

Equal crosses have all four outlets of equal size.

Reducing crosses have branches that are smaller in size to that of the run to obtain the desired flow and pressure through the system.

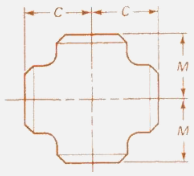

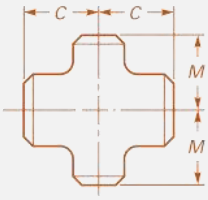

BUTT WELD FITTINGS TYPES

CAPS

The function of an end cap is to block off the end of a line in piping systems. This is achieved by placing the end cap over the open line and welding around the joint.

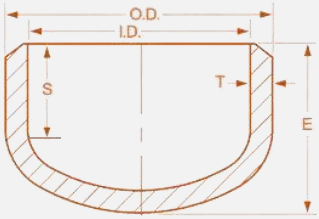

LAP JOINT STUB ENDS

A lap joint stub end and its associated slip-on flange in a piping system allows quick disconnection of the particular section involved. Stub ends are installed in pairs and mated together with two lap joint flanges. The surface of the stub end has a phonographic serrated gasket surface which prevents leakage at the joint. Using stub ends allows sections of the line to be opened for cleaning, inspection or quick replacement etc., without the need to re-weld. There are two basic types of stub end, ANSI types A & B long barrel, and M.S.S. types short barrel. Under certain design criteria such as temperature or pressure, etc., it is not acceptable to have the joint between stub end and pipe in close proximity with the flange joint, in these applications ANSI types are used.

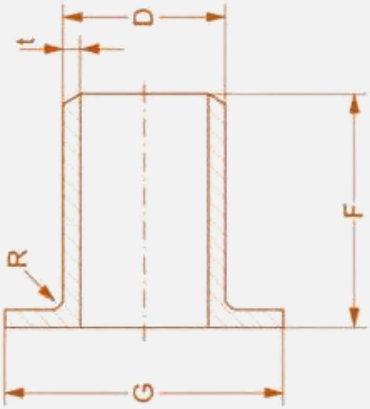

Butt Weld Fittings to ANSI.B16.9 & BS1640: Long & Short Radius Elbows

Normal Pipe Size		Outside Diameter Y	Wall Thickness T		45 Elbow Long Radius Centre to Face B	Approx Weight	90 Elbow Long Radius Centre to Face A	Approx Weight	90 Elbow Short Radius Centre to Face A	Approx Weight
mm	in	mm	mm	Schedule	mm	kg	mm	kg	mm	kg
15	1/2”	21.3	2.78	STD	15.9	0.04	38.1	0.08	-	-
			3.73	X.S	15.9	0.05	38.1	0.1	-	-
20	3/4”	26.7	2.87	STD	11.1	0.04	28.6	0.08	-	-
			3.91	X.S	11.1	0.05	28.6	0.11	-	-
25	1”	33.4	3.38	STD	22.2	0.09	38.1	0.15	25.4	0.11
			4.55	X.S	22.2	0.11	38.1	0.19	25.4	0.14
32	11/4”	42.2	3.56	STD	25.4	0.14	47.6	0.28	31.75	0.18
			4.85	X.S	25.4	0.2	47.6	0.39	31.75	0.24
40	11/2”	48.3	3.68	STD	28.6	0.2	57.1	0.4	38.1	0.26
			5.08	X.S	28.6	0.25	57.1	0.5	38.1	0.35
50	2”	60.3	3.91	STD	34.9	0.36	76.2	0.72	50.8	0.5
			5.54	X.S	34.9	0.5	76.2	1	50.8	0.68
65	21/2”	73	5.16	STD	44.4	0.73	95.2	1.46	63.5	0.95
			7.01	X.S	44.4	0.91	95.2	1.82	63.5	1.27
80	3”	88.9	5.49	STD	50.8	1.1	114.3	2.18	76.2	1.45
			7.62	X.S	50.8	1.45	114.3	2.86	76.2	1.95
100	4”	114.3	6.02	STD	63.5	2.1	152.4	4.2	101.6	2.8
			8.56	X.S	63.5	2.9	152.4	5.7	101.6	3.9
125	5”	141.3	6.65	STD	79.4	3.4	190	6.8	127	4.8
			9.5	X.S	79.4	5	190	10	127	6.5
150	6”	168.3	7.11	STD	95.2	5.1	229	10.1	152.4	6.8
			10.97	X.S	95.2	7.7	229	15.3	152.4	10.2
200	8”	219.1	8.18	STD	127	10.2	305	20.4	203	13.6
			12.7	X.S	127	15.5	305	30.9	203	20.9
250	10”	273.9	9.27	STD	159	18.1	381	36.1	254	24.1
			12.7	X.S	159	24.4	381	48.8	254	32.5
300	12”	323.9	9.52	STD	190	26.6	457	53.1	305	35.4
			12.7	X.S	190	35	457	70	305	46.7
350	14”	355.6	9.52	STD	222	34.1	533	68.1	356	45.4
			12.7	X.S	222	45	533	90	356	60
400	16”	406.4	9.52	STD	254	45	610	89.3	406	59.5
			12.7	X.S	254	59	610	118	406	78.7
450	18”	457	9.52	STD	286	56.5	686	113	457	75.6
			12.7	X.S	286	75	686	150	457	100
500	20”	508	9.52	STD	318	85	762	140	508	93.5
			12.7	X.S	318	112.5	762	186	508	124
600	24”	610	9.52	STD	381	101.5	914	203	610	135
			12.7	X.S	381	134.5	914	269	610	179

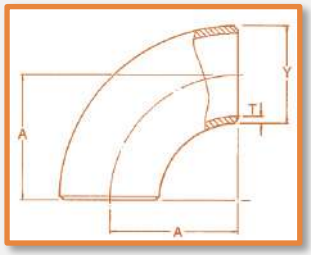

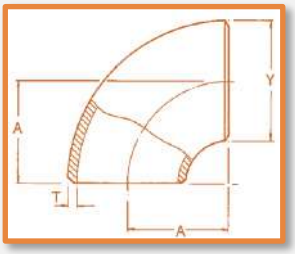

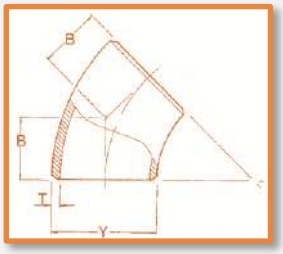

Armoduro®

Butt Weld Fittings to ANSI.B.16.9 & BS1640: EQ Tees & Caps

Normal Pipe Size		Outside Diameter Y	Wall Thickness T		Tees (C&M)	Approx Weight	Caps End to E	Approx Weight
mm	in	mm	mm	Schedule	mm	mm	mm	kg
15	1/2”	21.3	2.78	STD	25.4	0.58		
			3.73	X.S	25.4	0.21		
20	3/4”	26.7	2.87	STD	28.6	0.21		
			3.91	X.S	28.6	0.27		
25	1”	33.4	3.38	STD	38.1	0.34	38.1	0.1
			4.55	X.S	38.1	0.43	38.1	0.14
32	11/4”	42.2	3.56	STD	47.6	0.64	38.1	0.14
			4.85	X.S	47.6	0.75	38.1	0.18
40	11/2”	48.3	3.68	STD	57.1	0.95	38.1	0.18
			5.08	X.S	57.1	1.13	38.1	0.23
50	2”	60.3	3.91	STD	63.5	1.45	38.1	0.27
			5.54	X.S	63.5	1.72	38.1	0.32
65	21/2”	73	5.16	STD	76.2	2.45	38.1	0.41
			7.01	X.S	76.2	2.95	38.1	0.45
80	3”	88.9	5.49	STD	85.7	3.45	50.8	0.64
			7.62	X.S	85.7	4.3	50.8	0.82
100	4”	114.3	6.02	STD	105	5.7	63.5	1.13
			8.56	X.S	105	7.3	63.5	1.54
125	5”	141.3	6.65	STD	124	9.1	76.2	1.91
			9.5	X.S	124	11.8	76.2	2.59
150	6”	168.3	7.11	STD	143	13.6	88.9	2.95
			10.97	X.S	143	19	88.9	4.1
200	8”	219.1	8.18	STD	178	25	101.6	5
			12.7	X.S	178	33.5	101.6	7.3
250	10”	273	9.27	STD	216	41	127	9.1
			12.7	X.S	216	54	127	12
300	12”	323.9	9.52	STD	254	57	152.4	13.6
			12.7	X.S	254	77	152.4	17
350	14”	355.6	9.52	STD	279	73	165.1	15.9
			12.7	X.S	279	93	165.1	21
400	16”	406.4	9.52	STD	305	91	178.8	20
			12.7	X.S	305	120	178.8	26
450	18”	457	9.52	STD	343	127	203.2	26
			12.7	X.S	343	165	203.2	34
500	20”	508	9.52	STD	381	227	228.6	33
			12.7	X.S	381	270	228.6	43
600	24”	610	9.52	STD	432	345	266.7	46
			12.7	X.S	432	430	266.7	61

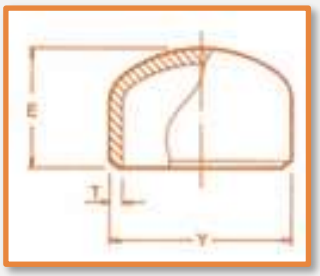

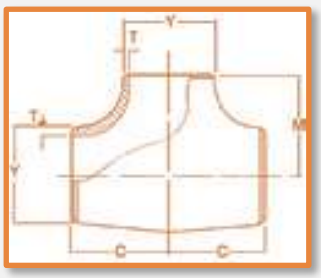

Butt Weld Fittings to ANSI.B16.9 & BS1640: Concentric & Eccentric Reducers

Normal Pipe Size Y		Length H	Schedule T	Approx Weight
mm	in	mm		Kg
20 x 15	3/4" x 1/2"	38.1	STD	0.07
			XS	0.1
25 x 15	1" x 1/2"	50.8	STD	0.14
			X.S	0.18
25 x 20	1" x 3/4"	50.8	STD	0.14
			X.S	0.18
32 x 15	11/4" x 1/2"	50.8	STD	0.18
			X.S	0.23
32 x 20	11/4" x 3/4"	50.8	STD	0.18
			X.S	0.23
32 x 25	11/4" x 1"	50.8	STD	0.18
			X.S	0.23
40 x 15	11/2" x 1/2"	63.5	STD	0.27
			X.S	0.32
40 x 20	11/2" x 3/4"	63.5	STD	0.27
			X.S	0.32
40 x 25	11/2" x 1"	63.5	STD	0.27
			X.S	0.32
40 x 32	11/2" x 11/4"	63.5	STD	0.27
			X.S	0.32
50 x 15	2" x 1/2"	76.2	STD	0.41
			X.S	0.54
50 x 20	2" x 3/4"	76.2	STD	0.41
			X.S	0.54
50 x 25	2" x 1"	76.2	STD	0.41
			X.S	0.54
50 x 32	2" x 11/4"	76.2	STD	0.41
			X.S	0.54
50 x 40	2" x 11/2"	76.2	STD	0.41
			X.S	0.54
65 x 25	21/2" x 1"	88.9	STD	0.68
			X.S	0.91
65 x 32	21/2" x 11/4"	88.9	STD	0.68
			X.S	0.91

Normal Pipe Size Y		Length H	Schedule T	Approx Weight
mm	in	mm		Kg
65 x 40	21/2" x 11/2"	88.9	STD	0.68
			X.S	0.91
65 x 50	21/2" x 2"	88.9	STD	0.68
			X.S	0.91
80 x 40	3" x 11/2"	88.9	STD	0.77
			X.S	1.09
80 x 50	3" x 2"	88.9	STD	0.91
			X.S	1.22
80 x 65	3" x 21/2"	88.9	STD	0.91
			X.S	1.27
100 x 40	4" x 11/2"	101.6	STD	1.36
			X.S	1.91
100 x 50	4" x 2"	101.6	STD	1.4
			X.S	1.95
100 x 65	4" x 21/2"	101.6	STD	1.45
			X.S	2.04
100 x 80	4" x 3"	101.6	STD	1.59
			X.S	2.08
125 x 80	5" x 3"	127	STD	2.5
			X.S	3.4
125 x 100	5" x 4"	127	STD	2.7
			X.S	3.8
150 x 50	6" x 2"	140	STD	3.4
			X.S	4.3
150 x 65	6" x 21/2"	140	STD	3.4
			X.S	4.5
150 x 80	6" x 3"	140	STD	3.6
			X.S	4.8
150 x 100	6" x 4"	140	STD	3.7
			X.S	5.2
150 x 125	6" x 5"	140	STD	3.9
			X.S	5.4

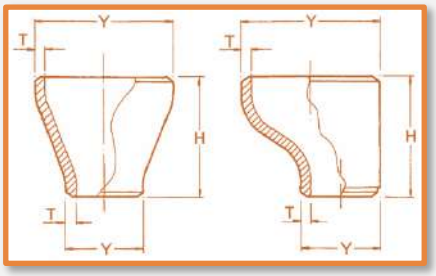

Armoduro®

Butt Weld Fittings to ANSI.B16.9 & BS1640: Concentric & Eccentric Reducers

Normal Pipe Size Y		Length H	Schedule T	Approx Weight
mm	in	mm		Kg
200 x 80	8” x 3”	152.4	STD	4.5
			X.S	7.2
200 x 100	8” x 4”	152.4	STD	5
			X.S	7.7
200 x 125	8” x 5”	152.4	STD	5.4
			X.S	8.2
200 x 150	8” x 6”	152.4	STD	5.9
			X.S	8.6
250 x 100	10” x 4”	178	STD	9.1
			X.S	11.8
250 x 125	10” x 5”	178	STD	9.5
			X.S	13.6
250 x 150	10” x 6”	178	STD	9.5
			X.S	13.6
250 x 200	10” x 8”	178	STD	10
			X.S	14
300 x 150	12” x 6”	203	STD	14.1
			X.S	18.1
300 x 200	12” x 8”	203	STD	14.5
			X.S	19.1
300 x 250	12” x 10”	203	STD	15.4
			X.S	20
350 x 200	14” x 8”	330	STD	26.3
			X.S	34.9
350 x 250	14” x 10”	330	STD	27.2
			X.S	36.3
350 x 300	14” x 12”	330	STD	28.6
			X.S	37.6
400 x 200	16” x 8”	356	STD	31.8
			X.S	42.6
400 x 250	16” x 10”	356	STD	33.1
			X.S	43.5
400 x 300	16” x 12”	356	STD	34.5
			X.S	45.4

Normal Pipe Size Y		Length H	Schedule T	Approx Weight
mm	in	mm		Kg
400 x 350	16” x 14”	356	STD	35.4
			X.S	46.3
450 x 250	18” x 10”	381	STD	38
			X.S	52.1
450 x 300	18” x 12”	381	STD	39
			X.S	53.5
450 x 350	18” x 14”	381	STD	40
			X.S	54.9
450 x 400	18” x 16”	381	STD	40.8
			X.S	53.5
500 x 250	20” x 10”	508	STD	53
			X.S	79.9
500 x 300	20” x 12”	508	STD	54.4
			X.S	82
500 x 350	20” x 14”	508	STD	57.6
			X.S	80.2
500 x 400	20” x 16”	508	STD	58.9
			X.S	82
500 x 450	20” x 18”	508	STD	61.7
			X.S	82
600 x 300	24” x 12”	508	STD	63.5
			X.S	84.4
600 x 350	24” x 14”	508	STD	65.3
			X.S	86.8
600 x 400	24” x 16”	508	STD	68
			X.S	90.4
600 x 450	24” x 18”	508	STD	72.6
			X.S	96.5
600 x 500	24” x 20”	508	STD	77.1
			X.S	102.5

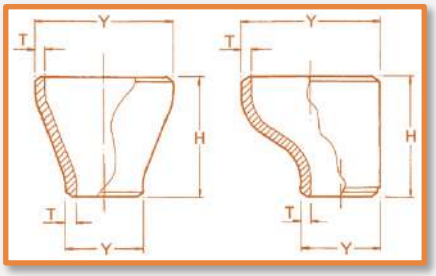

Armoduro®

FLANGES

ARMODURO® presents a wide selection of accurately crafted flanges, available in various types, sizes, and pressure ratings. These flanges are manufactured by some of the top producers and have undergone rigorous inspection to ensure their quality and eliminate any defects.

Manufacturing Standards	:	ASME B 16.5/B16.36/B16.48 -EN1092-1/EN1759-l - NFE- DIN
Flange Types	:	WN Flange, Blind Flange, Slip-On Flange, SW Flange, Threaded Flange, Lap-Joint Flange, Spectacle Blind
Pressure Rating	:	From 150LBS to 2500LBS / PN10 to PN400
Sizes Range	:	From 1/2" to 72"
Face Types	:	RF, FF, RTJ

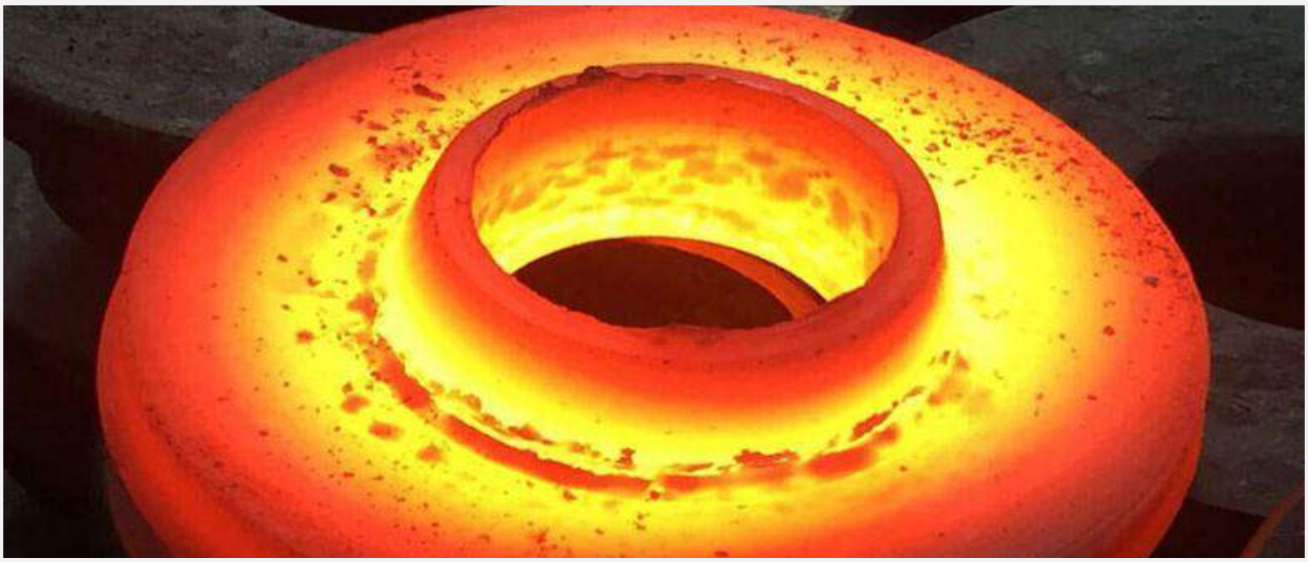

GRADES:

Stainless Steel	:	A182- F304/L, F316/L, F321
Carbon Steel	:	A105, A350 LF2
Duplex & Super Duplex	:	F51, F53, F55, F60, F61
Nickel & High Temperature	:	F310, F904L, UNS N08825, UNS N06625, UNS N08020, Titanium Gr2

FLANGES TYPES

WELD NECK

They are distinguished from other types by their long tapered hub and gentle transition of thickness in the region of the butt weld joining them to the pipe. The long tapered hub provides an important reinforcement of the flange proper from the standpoint of strength and resistance to dishing. The smooth transition from flange thickness to pipe wall thickness effected by the taper is extremely beneficial under conditions of repeated bending, caused by line expansion or other variable forces and produces an endurance strength of welding neck flanged assemblies equivalent to that of a butt welded joint between pipes, which, in practice, is the same as that of unwelded pipe. Thus, this type of flange is preferred for every severe service condition, whether this results from high pressure or from sub-zero or elevated temperature, and whether loading conditions are substantially constant or fluctuate between wide limits.

SLIP-ON

Continue to be preferred to welding neck flanges by many users on account of their initially lower cost, the reduced accuracy required in cutting the pipe to length, and the somewhat greater ease of alignment of the assembly; however their final installed cost is probably not much, if any, less than that of welding neck flanges. Their calculated strength under internal pressure is approximately two-thirds that of welding neck flanges, and their life under fatigue is about one-third that of the latter. For these reasons, slip-on flanges are limited to sizes !4” to 2 %” in the 1500 lb standard and are not shown in the 25001b standard.

BLIND

Are used to blank off the ends of piping, valves and pressure vessel opening. From the standpoint of internal pressure and bolt loading, blind flanges, particularly in the larger sizes, are the most highly stressed of all flange types; however, since the maximum stresses in a blind flange are bending stresses at the center, they can safely be permitted to be higher than in other types of flanges.

FLANGES TYPES

THREADED

Are confined to special applications. Their chief merit lies in the fact that they can be assembled without welding this explains their use in extremely high pressure services, particularly at or near atmospheric temperature, where alloy steel is essential for strength and where the necessary post weld heat treatment is impractical. Threaded flanges are unsuited for conditions involving temperature or bending stresses of any magnitude, particularly under cyclic conditions, where leakage through the threads may occur in relatively few cycles of heating or stress; sea welding is sometimes employed to overcome this but cannot be considered as entirely satisfactory.

SOCKET WELDING

Were initially developed for use on small size high pressure piping. When Provided with an internal weld, their static strength is equal to, but their Fatigue strength 50% greater than double welding slip-on flanges. Smooth Bore conditions can readily be attained (by grinding the internal weld) without having to bevel the flange face and, after welding, to reface the flange as would be required with slip-on flanges. The internally welded socket type flange is popular in chemical process piping for this reason.

LAP JOINT FLANGE

Lap Joint Flanges(Loose Flanges) are used with a corresponding stub-end that “inserts” in the inside of the flange. Comparing to other types of flanges, the main benefit of this type of flange is that once the pipe welds to the insert stub-end, the flange then can rotate for easier alignment of the bolting holes.

REDUCING FLANGE

Reducing flanges are a specialty flange that are most often used on projects that require the fitting together of different sized pipes. There are several types of reducing flanges including weld-neck reducing flanges, slip-on reducing flanges and threaded reducing flanges.

FLANGES TYPES

LONG WELDNECK FLANGE

Applications involving high pressure and the need for a hub that is long and tapered are what weld neck flanges are most often used for. Specifying the schedule of pipe that it will be utilized for is of utmost importance when ordering. This type of flange is excellent for use in environments involving extreme temperature fluctuations and excessive handling and bending.

ORIFICE FLANGES

Orifice Flanges are used with orifice meters for the purpose of measuring the flow rate of either liquids or gases in the respective pipeline. Pairs of pressure “Tappings”, mostly on 2 sides, directly opposite each other, are machined into the orifice flange.

SPECTACLE BLIND

Spectacle blind consists of a blind and spacer. The blind is installed in between flanges to securely shutdown pipeline during leakage or maintenance. When a blind is not required, a spacer can be installed in between flanges to continue regular operating conditions.

SPADE / SPACERS

Spade and Spacers are part of a family referred to as Line Blinds. Jointly they perform the same function as a Spectacle Blind as essentially a simplistic valve. The Spade or Spacer is fitted in the line between two flanges and is bolted in place.

DRIP RINGS

Drip Rings (sometimes known as Flushing Rings) are commonly used in applications where Plugging may occur or where in-situ calibration is required without removing the instrument from the process.

FLANGES DIMENTIONS

150 lb/sq. in.

Welding Neck Flanges

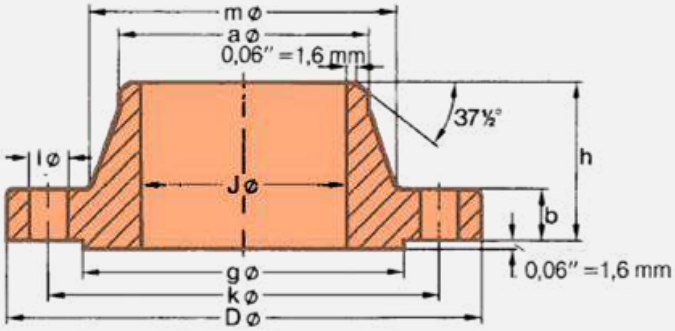

ASME B 16.5

Pipe		Flange				Hub		Raised Face	Drilling Template			Approx. Weight
Nom. Size	O D in. mm	D in. mm	J in. mm	b in. mm	h in. mm	a in. mm	m in. mm	g in. mm	Number	l in. mm	k in. mm	≈ Pounds Kilo
½"	0,84 21,3	3,50 88,9	0,62 15,7	0,44 11,2	1,88 47,8	0,84 21,3	1,19 30,2	1,38 35,1	4	0,62 15,7	2,38 60,5	1,1 0,48
¾"	1,05 26,7	3,88 98,6	0,82 20,8	0,50 12,7	2,06 52,3	1,05 26,7	1,50 38,1	1,69 42,9	4	0,62 15,7	2,75 69,9	1,6 0,71
1"	1,315 33,4	4,25 108,0	1,05 26,7	0,56 14,2	2,19 55,6	1,32 33,5	1,94 49,3	2,00 50,8	4	0,62 15,7	3,12 79,2	2,2 1,01
1¼"	1,66 42,2	4,62 117,3	1,38 35,1	0,62 15,7	2,25 57,2	1,66 42,2	2,31 58,7	2,50 63,5	4	0,62 15,7	3,50 88,9	2,9 1,33
1½"	1,90 48,3	5,00 127,0	1,61 40,9	0,69 17,5	2,44 62,0	1,90 48,3	2,56 65,0	2,88 73,2	4	0,62 15,7	3,88 98,6	3,8 1,72
2"	2,375 60,3	6,00 152,4	2,07 52,6	0,75 19,1	2,50 63,5	2,38 60,5	3,06 77,7	3,62 91,9	4	0,75 19,1	4,75 120,7	5,7 2,58
2½"	2,875 73,0	7,00 177,8	2,47 62,7	0,88 22,4	2,75 69,9	2,88 73,2	3,56 90,4	4,12 104,6	4	0,75 19,1	5,50 139,7	9,1 4,11
3"	3,50 88,9	7,50 190,5	3,07 78,0	0,94 23,9	2,75 69,6	3,50 88,9	4,25 108,0	5,00 127,0	4	0,75 19,1	6,00 152,4	10,8 4,92
3½"	4,00 101,6	8,50 215,9	3,55 90,2	0,94 23,9	2,81 71,4	4,00 101,6	4,81 122,2	5,50 139,7	8	0,75 19,1	7,00 177,8	13,4 6,08
4"	4,50 114,3	9,00 228,6	4,03 102,4	0,94 23,9	3,00 76,2	4,50 114,3	5,31 134,9	6,19 157,2	8	0,75 19,1	7,50 190,5	15,1 6,84
5"	5,563 141,3	10,00 254,0	5,05 128,3	0,94 23,9	3,50 88,9	5,56 141,2	6,44 163,6	7,31 185,7	8	0,88 22,4	8,50 215,9	18,9 8,56
6"	6,625 168,3	11,00 279,4	6,07 154,2	1,00 25,4	3,50 88,9	6,63 168,4	7,56 192,0	8,50 215,9	8	0,88 22,4	9,50 241,3	23,3 10,6
8"	8,625 219,1	13,50 342,9	7,98 202,7	1,12 28,4	4,00 101,6	8,63 219,2	9,69 246,1	10,62 269,7	8	0,88 22,4	11,75 298,5	38,8 17,6
10"	10,75 273	16,00 406,4	10,02 254,5	1,19 30,2	4,00 101,6	10,75 273,1	12,00 304,8	12,75 323,9	12	1,00 25,4	14,25 362,0	53,0 24,0
12"	12,75 323,8	19,00 482,6	12,00 304,8	1,25 31,8	4,50 114,3	12,75 323,9	14,38 365,3	15,00 381,0	12	1,00 25,4	17,00 431,8	80,4 36,5
14"	14,0 355,6	21,00 533,4	To be specified by purchaser	1,38 35,1	5,00 127,0	14,00 355,6	15,75 400,1	16,25 412,8	12	1,12 28,4	18,75 476,3	107 48,4
16"	16,0 406,4	23,50 596,9		1,44 36,6	5,00 127,0	16,00 406,4	18,00 457,2	18,50 469,9	16	1,12 28,4	21,25 539,8	134 60,6
18"	18,0 457,2	25,00 635,0		1,56 39,6	5,50 139,7	18,00 457,2	19,88 505,0	21,00 533,4	16	1,25 31,8	22,75 577,9	151 68,3
20"	20,0 508	27,50 698,5		1,69 42,9	5,69 144,5	20,00 508,0	22,00 558,8	23,00 584,2	20	1,25 31,8	25,00 635,0	186 84,5
24"	24,0 609,6	32,00 812,8		1,88 47,8	6,00 152,4	24,00 609,6	26,12 663,4	27,25 692,2	20	1,38 35,1	29,50 749,3	253 115

FLANGES DIMENTIONS

300 lb/sq. in.

Welding Neck Flanges

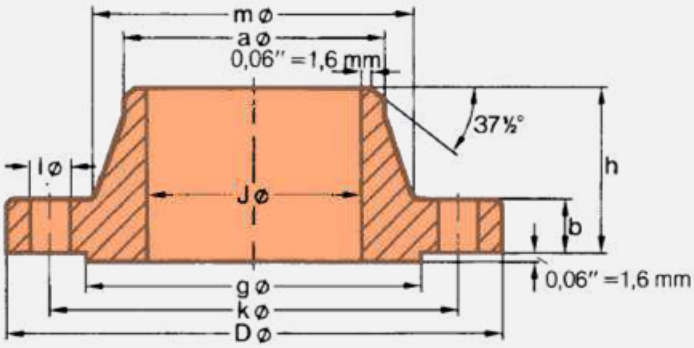

ASME B 16.5

Pipe		Flange				Hub		Raised Face	Drilling Template			Approx. Weight
Nom. Size	O D in. mm	D in. mm	J in. mm	b in. mm	h in. mm	a in. mm	m in. mm	g in. mm	Num-ber	l in. mm	k in. mm	≈ Pounds Kilo
1/2"	0,84 21,3	3,75 95,2	0,62 15,7	0,56 14,2	2,06 52,3	0,84 21,3	1,50 38,1	1,38 35,0	4	0,62 15,7	2,62 66,5	1,7 0,75
3/4"	1,05 26,7	4,62 117,3	0,82 20,8	0,62 15,7	2,25 57,1	1,05 26,7	1,88 47,7	1,69 42,9	4	0,75 19,0	3,25 82,5	2,8 1,26
1"	1,315 33,4	4,88 123,9	1,05 26,7	0,69 17,5	2,44 62,0	1,32 33,5	2,12 53,8	2,00 50,8	4	0,75 19,0	3,50 88,9	3,5 1,52
1 1/4"	1,66 42,2	5,25 133,3	1,38 35,1	0,75 19,0	2,56 65,0	1,66 42,2	2,50 63,5	2,50 63,5	4	0,75 19,0	3,88 98,5	4,5 2,03
1 1/2"	1,90 48,3	6,12 155,4	1,61 40,9	0,81 20,6	2,69 68,3	1,90 48,3	2,75 69,8	2,88 73,2	4	0,88 22,3	4,50 114,3	6,4 2,89
2"	2,375 60,3	6,50 165,1	2,07 52,6	0,88 22,3	2,75 69,8	2,38 60,5	3,31 84,0	3,62 91,9	8	0,75 19,0	5,00 127,0	7,5 3,40
2 1/2"	2,875 73,0	7,50 190,5	2,47 62,7	1,00 25,4	3,00 76,2	2,88 73,2	3,94 100,0	4,12 104,6	8	0,88 22,3	5,88 149,3	11,4 5,17
3"	3,50 88,9	8,25 209,5	3,07 78,0	1,12 28,4	3,12 79,2	3,50 88,9	4,62 117,3	5,00 127,0	8	0,88 22,3	6,62 168,1	15,3 6,93
3 1/2"	4,00 101,6	9,00 228,6	3,55 90,2	1,19 30,2	3,19 81,0	4,00 101,6	5,25 133,3	5,50 139,7	8	0,88 22,3	7,25 184,1	19,1 8,67
4"	4,50 114,3	10,00 254,0	4,03 102,4	1,25 31,7	3,38 85,8	4,50 114,3	5,75 146,0	6,19 157,2	8	0,88 22,3	7,88 200,1	24,7 11,2
5"	5,563 141,3	11,00 279,4	5,05 128,3	1,38 35,0	3,88 98,5	5,56 141,2	7,00 177,8	7,31 185,6	8	0,88 22,3	9,25 234,9	33,3 15,1
6"	6,625 168,3	12,50 317,5	6,07 154,2	1,44 36,5	3,88 98,5	6,63 168,4	8,12 206,2	8,50 215,9	12	0,88 22,3	10,62 269,7	42,4 19,1
8"	8,625 219,1	15,00 381,0	7,98 202,7	1,62 41,1	4,38 111,2	8,63 219,2	10,25 260,3	10,62 269,7	12	1,00 25,4	13,00 330,2	65,9 29,9
10"	10,75 273	17,50 444,5	10,02 254,5	1,88 47,7	4,62 117,3	10,75 273,1	12,62 320,5	12,75 323,8	16	1,12 28,4	15,25 387,3	94,1 42,7
12"	12,75 323,8	20,50 520,7	12,00 304,8	2,00 50,8	5,12 130,0	12,75 323,8	14,75 374,6	15,00 381,0	16	1,25 31,7	17,75 450,8	136 61,8
14"	14,00 355,6	23,00 584,2	To be specified by purchaser	2,12 53,8	5,62 142,7	14,00 355,6	16,75 425,4	16,25 412,7	20	1,25 31,7	20,25 514,3	189 85,8
16"	16,00 406,4	25,50 647,7		2,25 57,1	5,75 146,0	16,00 406,4	19,00 482,6	18,50 469,9	20	1,38 35,0	22,50 571,5	234 106
18"	18,00 457,2	28,00 711,2		2,38 60,4	6,25 158,7	18,00 457,2	21,00 533,4	21,00 533,4	24	1,38 35,0	24,75 628,6	289 131
20"	20,00 508	30,50 774,7		2,50 63,5	6,38 162,0	20,00 508,0	23,12 587,2	23,00 584,2	24	1,38 35,0	27,00 685,8	348 158
24"	24,00 609,6	36,00 914,4		2,75 69,8	6,62 168,1	24,00 609,6	27,62 701,5	27,25 692,2	24	1,62 41,1	32,00 812,8	507 230

Armoduro®

FLANGES DIMENTIONS

600 lb/sq. in.

Welding Neck Flanges

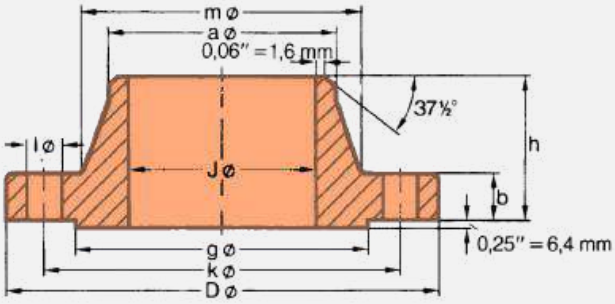

ASME B 16.5

Pipe		Flange				Hub		Raised Face	Drilling Template			Approx. Weight
Nom. Size	O D in. mm	D in. mm	J in. mm	b in. mm	h in. mm	a in. mm	m in. mm	g in. mm	Num-ber	l in. mm	k in. mm	≈ Pounds Kilo
1/2"	0,84 21,3	3,75 95,2	To be specified by purchaser	0,56 14,2	2,06 52,3	0,84 21,3	1,50 38,1	1,38 35,1	4	0,62 15,7	2,62 66,5	1,9 0,87
3/4"	1,05 26,7	4,62 117,3		0,62 15,7	2,25 57,2	1,05 26,7	1,88 47,7	1,69 42,9	4	0,75 19,1	3,25 82,6	3,2 1,45
1"	1,315 33,4	4,88 123,9		0,69 17,5	2,44 62,0	1,32 33,5	2,12 53,8	2,00 50,8	4	0,75 19,1	3,50 88,9	3,9 1,76
1 1/4"	1,66 42,2	5,25 133,3		0,81 20,6	2,62 66,5	1,66 42,2	2,50 63,5	2,50 63,5	4	0,75 19,1	3,88 98,6	5,5 2,49
1 1/2"	1,90 48,3	6,12 155,4		0,88 22,4	2,75 69,9	1,90 48,3	2,75 69,8	2,88 73,2	4	0,88 22,4	4,50 114,3	7,7 3,49
2"	2,375 60,3	6,50 165,1		1,00 25,4	2,88 73,2	2,38 60,5	3,31 84,0	3,62 91,9	8	0,75 19,1	5,00 127,0	9,6 4,36
2 1/2"	2,875 73,0	7,50 190,5		1,12 28,4	3,12 79,2	2,88 73,2	3,94 100,0	4,12 104,6	8	0,88 22,4	5,88 149,4	14,2 6,43
3"	3,50 88,9	8,25 209,5		1,25 31,8	3,25 82,6	3,50 88,9	4,62 117,3	5,00 127,0	8	0,88 22,4	6,62 168,1	18,8 8,53
3 1/2"	4,00 101,6	9,00 228,6		1,38 35,1	3,38 85,9	4,00 101,6	5,25 133,4	5,50 139,7	8	1,00 25,4	7,25 184,2	23,6 10,7
4"	4,50 114,3	10,75 273,1		1,50 38,1	4,00 101,6	4,50 114,3	6,00 152,4	6,19 157,2	8	1,00 25,4	8,50 215,9	38,3 17,4
5"	5,563 141,3	13,00 330,2		1,75 44,5	4,50 114,3	5,56 141,2	7,44 189,0	7,31 185,7	8	1,12 28,4	10,50 266,7	64,3 29,2
6"	6,625 168,3	14,00 355,6		1,88 47,8	4,62 117,3	6,63 168,4	8,75 222,3	8,50 215,9	12	1,12 28,4	11,50 292,1	76,9 34,9
8"	8,625 219,1	16,50 419,1		2,19 55,6	5,25 133,4	8,63 219,2	10,75 273,1	10,62 269,7	12	1,25 31,8	13,75 349,3	119 53,9
10"	10,75 273	20,00 508,0		2,50 63,5	6,00 152,4	10,75 273,1	13,50 342,9	12,75 323,9	16	1,38 35,1	17,00 431,8	191 86,5
12"	12,75 323,8	22,00 558,8		2,62 66,5	6,12 155,4	12,75 323,9	15,75 400,1	15,00 381,0	20	1,38 35,1	19,25 489,0	227 103
14"	14,0 355,6	23,75 603,3		2,75 69,9	6,50 165,1	14,00 355,6	17,00 431,8	16,25 412,8	20	1,50 38,1	20,75 527,1	269 122
16"	16,0 406,4	27,00 685,8		3,00 76,2	7,00 177,8	16,00 406,4	19,50 495,3	18,50 469,9	20	1,62 41,1	23,75 603,3	374 170
18"	18,0 457,2	29,25 743,0		3,25 82,6	7,25 184,2	18,00 457,2	21,50 546,1	21,00 533,4	20	1,75 44,5	25,75 654,1	449 204
20"	20,0 508	32,00 812,8		3,50 88,9	7,50 190,5	20,00 508,0	24,00 609,6	23,00 584,2	24	1,75 44,5	28,50 723,9	560 254
24"	24,0 609,6	37,00 939,8		4,00 101,6	8,00 203,2	24,00 609,6	28,25 717,6	27,25 692,2	24	2,00 50,8	33,00 838,2	789 358

Armoduro®

FLANGES DIMENTIONS

150 lb/sq. in.

Slip-on Flanges

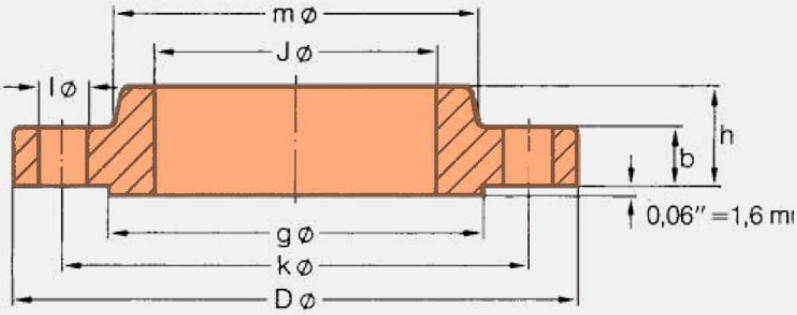

ASME B 16.5

Pipe		Flange				Hub	Raised Face	Drilling Template			Approx. Weight
Nom. Size	O D in. mm	D in. mm	J in. mm	b in. mm	h in. mm	m in. mm	g in. mm	Num-ber	l in. mm	k in. mm	≈ Pounds Kilo
1/2"	0,84 21,3	3,50 88,9	0,88 22,4	0,44 11,2	0,62 15,7	1,19 30,2	1,38 35,1	4	0,62 15,7	2,38 60,5	0,9 0,39
3/4"	1,05 26,7	3,88 98,6	1,09 27,7	0,50 12,7	0,62 15,7	1,50 38,1	1,69 42,9	4	0,62 15,7	2,75 69,9	1,2 0,56
1"	1,315 33,4	4,25 108,0	1,36 34,5	0,56 14,2	0,69 17,5	1,94 49,3	2,00 50,8	4	0,62 15,7	3,12 79,2	1,7 0,78
1 1/4"	1,66 42,2	4,62 117,3	1,70 43,2	0,62 15,7	0,81 20,6	2,31 58,7	2,50 63,5	4	0,62 15,7	3,50 88,9	2,3 1,03
1 1/2"	1,90 48,3	5,00 127,0	1,95 49,5	0,69 17,5	0,88 22,4	2,56 65,0	2,88 73,2	4	0,62 15,7	3,88 98,6	2,9 1,32
2"	2,375 60,3	6,00 152,4	2,44 62,0	0,75 19,1	1,00 25,4	3,06 77,7	3,62 91,9	4	0,75 19,1	4,75 120,7	4,5 2,06
2 1/2"	2,875 73,0	7,00 177,8	2,94 74,7	0,88 22,4	1,12 28,4	3,56 90,4	4,12 104,6	4	0,75 19,1	5,50 139,7	7,2 3,28
3"	3,50 88,9	7,50 190,5	3,57 90,7	0,94 23,9	1,19 30,2	4,25 108,0	5,00 127,0	4	0,75 19,1	6,00 152,4	8,5 3,85
3 1/2"	4,00 101,6	8,50 215,9	4,07 103,4	0,94 23,9	1,25 31,8	4,81 122,2	5,50 139,7	8	0,75 19,1	7,00 177,8	10,6 4,81
4"	4,50 114,3	9,00 228,6	4,57 116,1	0,94 23,9	1,31 33,3	5,31 134,9	6,19 157,2	8	0,75 19,1	7,50 190,5	11,7 5,30
5"	5,563 141,3	10,00 254,0	5,66 143,8	0,94 23,9	1,44 36,6	6,44 163,6	7,31 185,7	8	0,88 22,4	8,50 215,9	13,4 6,07
6"	6,625 168,3	11,00 279,4	6,72 170,7	1,00 25,4	1,56 39,6	7,56 192,0	8,50 215,9	8	0,88 22,4	9,50 241,3	16,4 7,45
8"	8,625 219,1	13,50 342,9	8,72 221,5	1,12 28,4	1,75 44,5	9,69 246,1	10,62 269,7	8	0,88 22,4	11,75 298,5	26,7 12,1
10"	10,75 273	16,00 406,4	10,88 276,4	1,19 30,2	1,94 49,3	12,00 304,8	12,75 323,9	12	1,00 25,4	14,25 362,0	36,3 16,5
12"	12,75 323,8	19,00 482,6	12,88 327,2	1,25 31,8	2,19 55,6	14,38 365,3	15,00 381,0	12	1,00 25,4	17,00 431,8	57,7 26,2
14"	14,0 355,6	21,00 533,4	14,14 359,2	1,38 35,1	2,25 57,2	15,75 400,1	16,25 412,8	12	1,12 28,4	18,75 476,3	76,2 34,6
16"	16,0 406,4	23,50 596,9	16,16 410,5	1,44 36,6	2,50 63,5	18,00 457,2	18,50 469,9	16	1,12 28,4	21,25 539,8	98,7 44,8
18"	18,0 457,2	25,00 635,0	18,18 461,8	1,56 39,6	2,69 68,3	19,88 505,0	21,00 533,4	16	1,25 31,8	22,75 577,9	108 48,9
20"	20,0 508	27,50 698,5	20,20 513,1	1,69 42,9	2,88 73,2	22,00 558,8	23,00 584,2	20	1,25 31,8	25,00 635,0	136 61,9
24"	24,0 609,6	32,00 812,8	24,25 616,0	1,88 47,8	3,25 82,6	26,12 663,4	27,25 692,2	20	1,38 35,1	29,50 749,3	191 86,9

FLANGES DIMENTIONS

300 lb/sq. in.

Slip-on Flanges

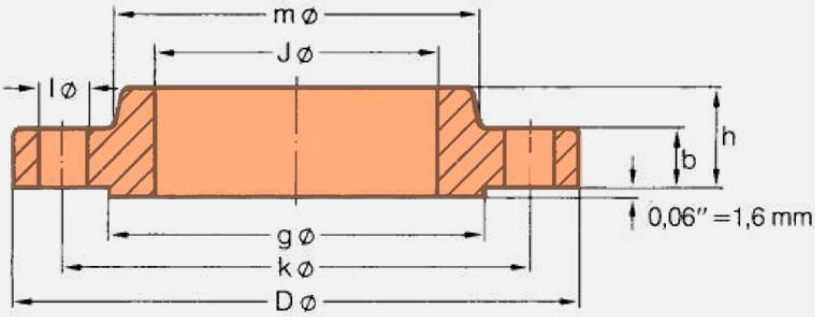

ASME B 16.5

Pipe		Flange				Hub	Raised Face	Drilling Template			Approx. Weight
Nom. Size	O D in. mm	D in. mm	J in. mm	b in. mm	h in. mm	m in. mm	g in. mm	Num-ber	l in. mm	k in. mm	≈ Pounds Kilo
1/2"	0,84 21,3	3,75 95,2	0,88 22,3	0,56 14,2	0,88 22,3	1,50 38,1	1,38 35,0	4	0,62 15,7	2,62 56,5	1,4 0,64
3/4"	1,05 26,7	4,62 117,3	1,09 27,7	0,62 15,7	1,00 25,4	1,88 47,7	1,69 42,9	4	0,75 19,0	3,25 82,5	3,5 1,12
1"	1,315 33,4	4,88 123,9	1,36 34,5	0,69 17,5	1,06 26,9	2,12 53,8	2,00 50,8	4	0,75 19,0	3,50 88,9	3,0 1,36
1 1/4"	1,66 42,2	5,25 133,3	1,70 43,2	0,75 19,0	1,06 26,9	2,50 63,5	2,50 63,5	4	0,75 19,0	3,88 98,5	3,7 1,68
1 1/2"	1,90 48,3	6,12 155,4	1,95 49,5	0,81 20,6	1,19 30,2	2,75 69,8	2,88 73,1	4	0,88 22,3	4,50 114,3	5,5 2,49
2"	2,375 60,3	6,50 165,1	2,44 62,0	0,88 22,3	1,31 33,2	3,31 84,0	3,62 91,9	8	0,75 19,0	5,00 127,0	6,3 2,87
2 1/2"	2,875 73,0	7,50 190,5	2,94 74,7	1,00 25,4	1,50 38,1	3,94 100,0	4,12 104,6	8	0,88 22,3	5,38 149,3	9,5 4,32
3"	3,50 88,9	8,25 209,5	3,57 90,7	1,12 28,4	1,69 42,9	4,62 117,3	5,00 127,0	8	0,88 22,3	6,62 168,1	12,9 5,85
3 1/2"	4,00 101,6	9,00 228,6	4,07 103,4	1,19 30,2	1,75 44,4	5,25 133,3	5,50 139,7	8	0,88 22,3	7,25 184,1	16,2 7,34
4"	4,50 114,3	10,00 254,0	4,57 116,1	1,25 31,7	1,88 47,7	5,75 146,0	6,19 157,2	8	0,88 22,3	7,88 200,1	21,2 9,61
5"	5,563 141,3	11,00 279,4	5,66 143,8	1,38 35,0	2,00 50,8	7,00 177,8	7,31 185,6	8	0,88 22,3	9,25 234,9	27,1 12,3
6"	6,625 168,3	12,50 317,5	6,72 170,7	1,44 36,5	2,06 52,3	8,12 206,2	8,50 215,9	12	0,88 22,3	10,62 269,7	34,4 15,6
8"	8,625 219,1	15,00 381,0	8,72 221,5	1,62 41,1	2,44 61,9	10,25 260,3	10,62 269,7	12	1,00 25,4	13,00 330,2	53,3 24,2
10"	10,75 273	17,50 444,5	10,88 276,3	1,88 47,7	2,62 66,5	12,62 320,5	12,75 323,8	16	1,12 28,4	15,25 387,3	75,1 34,1
12"	12,75 323,8	20,50 520,7	12,88 327,1	2,00 50,8	2,00 50,8	2,88 73,1	15,00 381,0	16	1,25 31,7	17,75 450,8	110 49,8
14"	14,0 355,6	23,00 584,2	14,14 359,1	2,12 53,8	3,00 76,2	16,75 425,4	16,25 412,7	20	1,25 31,7	20,25 514,3	154 69,9
16"	16,0 406,4	25,50 647,7	16,16 410,5	2,25 57,1	3,25 82,5	19,00 482,6	18,50 469,9	20	1,38 35,0	22,50 571,5	194 88,1
18"	18,0 457,2	28,00 711,2	18,18 461,8	2,38 60,4	3,50 88,9	21,00 533,4	21,00 533,4	24	1,38 35,0	24,75 628,6	240 109
20"	20,0 508	30,50 774,7	20,20 513,1	2,50 63,5	3,75 95,2	23,12 587,2	23,00 584,2	24	1,38 35,0	27,00 685,8	295 134
24"	24,0 609,6	36,00 914,4	24,25 615,9	2,75 69,8	4,19 106,4	27,62 701,5	27,25 692,2	24	1,62 41,1	32,00 812,8	443 201

FLANGES DIMENTIONS

600 lb/sq. in.

Slip-on Flanges

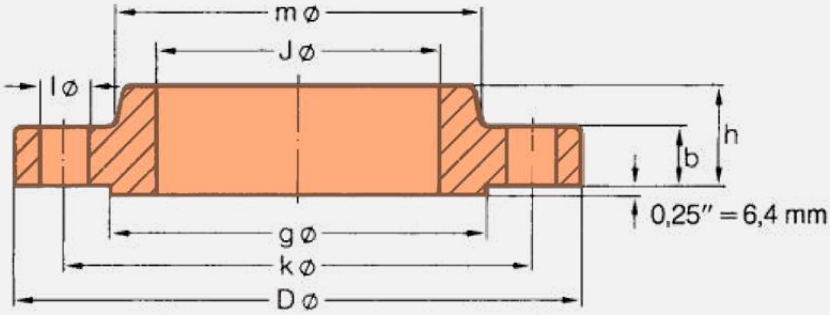

ASME B 16.5

Pipe		Flange				Hub	Raised Face	Drilling Template			Approx. Weight
Nom. Size	O D in. mm	D in. mm	J in. mm	b in. mm	h in. mm	m in. mm	g in. mm	Num-ber	l in. mm	k in. mm	≈ Pounds Kilo
1/2"	0,84 21,3	3,75 95,3	0,88 22,4	0,56 14,2	0,88 22,4	1,50 38,1	1,38 35,1	4	0,62 15,7	2,62 66,5	1,6 0,74
3/4"	1,05 26,7	4,62 117,3	1,09 27,7	0,62 15,7	1,00 25,4	1,88 47,7	1,69 42,9	4	0,75 19,1	3,25 82,6	2,8 1,27
1"	1,315 33,4	4,88 124,0	1,36 34,5	0,69 17,5	1,06 26,9	2,12 53,8	2,00 50,8	4	0,75 19,1	3,50 88,9	3,3 1,52
1 1/4"	1,66 42,2	5,25 133,4	1,70 43,2	0,81 20,6	1,12 28,4	2,50 63,5	2,50 63,5	4	0,75 19,1	3,88 98,6	4,5 2,03
1 1/2"	1,90 48,3	6,12 155,4	1,95 49,5	0,88 22,4	1,25 31,8	2,75 69,9	2,88 73,2	4	0,88 22,4	4,50 114,3	6,5 2,96
2"	2,375 60,3	6,50 165,1	2,44 62,0	1,00 25,4	1,44 36,6	3,31 84,1	3,62 91,9	8	0,75 19,1	5,00 127,0	8,0 3,62
2 1/2"	2,875 73,0	7,50 190,5	2,94 74,7	1,12 28,4	1,62 41,1	3,94 100,1	4,12 104,6	8	0,88 22,4	5,88 149,4	11,6 5,28
3"	3,50 88,9	8,25 209,6	3,57 90,7	1,25 31,8	1,81 46,0	4,62 117,3	5,00 127,0	8	0,88 22,4	6,62 168,1	15,4 7,00
3 1/2"	4,00 101,6	9,00 228,6	4,07 103,4	1,38 35,1	1,94 49,3	5,25 133,4	5,50 139,7	8	1,00 25,4	7,25 184,2	19,5 8,84
4"	4,50 114,3	10,75 273,1	4,57 116,1	1,50 38,1	2,12 53,8	6,00 152,4	6,19 157,2	8	1,00 25,4	8,50 215,9	31,9 14,5
5"	5,563 141,3	13,00 330,2	5,66 143,8	1,75 44,5	2,38 60,5	7,44 189,0	7,31 185,7	8	1,12 28,4	10,50 266,7	53,7 24,4
6"	6,625 168,3	14,00 355,6	6,72 170,7	1,88 47,8	2,62 66,5	8,75 222,3	8,50 215,9	12	1,12 28,4	11,50 292,1	63,2 28,7
8"	8,625 219,1	16,50 419,1	8,72 221,5	2,19 55,6	3,00 76,2	10,75 273,1	10,62 269,7	12	1,25 31,8	13,75 349,3	95,6 43,4
10"	10,75 273	20,00 508,0	10,88 276,4	2,50 63,5	3,38 85,9	13,50 342,9	12,75 323,9	16	1,38 35,1	17,00 431,8	155 70,3
12"	12,75 323,8	22,00 558,8	12,88 327,2	2,62 66,5	3,62 91,9	15,75 400,1	15,00 381,0	20	1,38 35,1	19,25 489,0	186 84,2
14"	14,0 355,6	23,75 603,3	14,14 359,2	2,75 69,9	3,69 93,7	17,00 431,8	16,25 412,8	20	1,50 38,1	20,75 527,1	217 98,7
16"	16,0 406,4	27,00 685,8	16,16 410,5	3,00 76,2	4,19 106,4	19,50 495,3	18,50 469,9	20	1,62 41,1	23,75 603,3	313 142
18"	18,0 457,2	29,25 743,0	18,18 461,8	3,25 82,6	4,62 117,3	21,50 546,1	21,00 533,4	20	1,75 44,5	25,75 654,1	381 173
20"	20,0 508	32,00 812,8	20,20 513,1	3,50 88,9	5,00 127,0	24,00 609,6	23,00 584,2	24	1,75 44,5	28,50 723,9	485 220
24"	24,0 609,6	37,00 939,8	24,25 616,0	4,00 101,6	5,50 139,7	28,25 717,6	27,25 692,2	24	2,00 50,8	33,00 838,2	687 312

FLANGES DIMENTIONS

150 lb/sq. in.

Lap Joint Flanges

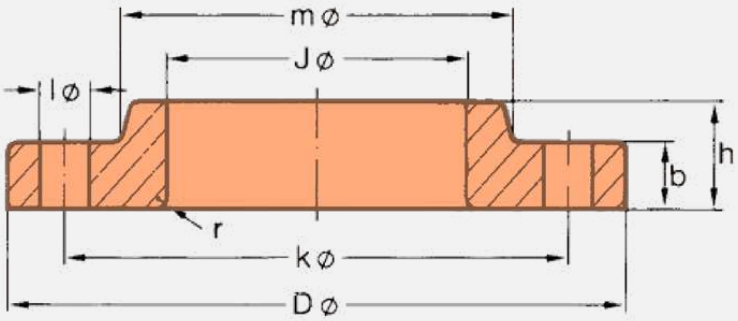

ASME B 16.5

Pipe		Flange					Hub	Drilling Template			Approx. Weight
Nom. Size	O D in. mm	D in. mm	J in. mm	b in. mm	h in. mm	r in. mm	m in. mm	Num-ber	l in. mm	k in. mm	≈ Pounds Kilo
1/2"	0,84 21,3	3,50 88,9	0,90 22,9	0,44 11,2	0,62 15,7	0,12 3,0	1,19 30,2	4	0,62 15,7	2,38 60,5	0,8 0,38
3/4"	1,05 26,7	3,88 98,6	1,11 28,2	0,50 12,7	0,62 15,7	0,12 3,0	1,50 38,1	4	0,62 15,7	2,75 69,9	1,2 0,55
1"	1,315 33,4	4,25 108,0	1,38 35,1	0,56 14,2	0,69 17,5	0,12 3,0	1,94 49,3	4	0,62 15,7	3,12 79,2	1,7 0,76
1 1/4"	1,66 42,2	4,62 117,3	1,72 43,7	0,62 15,7	0,81 20,6	0,19 4,8	2,31 58,7	4	0,62 15,7	3,50 88,9	2,2 1,01
1 1/2"	1,90 48,3	5,00 127,0	1,97 50,0	0,69 17,5	0,88 22,4	0,25 6,4	2,56 65,0	4	0,62 15,7	3,88 98,6	2,9 1,30
2"	2,375 60,3	6,00 152,4	2,46 62,5	0,75 19,1	1,00 25,4	0,31 7,9	3,06 77,7	4	0,75 19,1	4,75 120,7	4,5 2,03
2 1/2"	2,875 73,0	7,00 177,8	2,97 75,4	0,88 22,4	1,12 28,4	0,31 7,9	3,56 90,4	4	0,75 19,1	5,50 139,7	7,2 3,25
3"	3,50 88,9	7,50 190,5	3,60 91,4	0,94 23,9	1,19 30,2	0,38 9,7	4,25 108,0	4	0,75 19,1	6,00 152,4	8,4 3,81
3 1/2"	4,00 101,6	8,50 215,9	4,10 104,1	0,94 23,9	1,25 31,8	0,38 9,7	4,81 122,2	8	0,75 19,1	7,00 177,8	10,5 4,76
4"	4,50 114,3	9,00 228,6	4,60 116,8	0,94 23,9	1,31 33,3	0,44 11,2	5,31 134,9	8	0,75 19,1	7,50 190,5	11,6 5,25
5"	5,563 141,3	10,00 254,0	5,69 144,5	0,94 23,9	1,44 36,6	0,44 11,2	6,44 163,6	8	0,88 22,4	8,50 215,9	13,3 6,02
6"	6,625 168,3	11,00 279,4	6,75 171,5	1,00 25,4	1,56 39,6	0,50 12,7	7,56 192,0	8	0,88 22,4	9,50 241,3	16,3 7,40
8"	8,625 219,1	13,50 342,9	8,75 222,3	1,12 28,4	1,75 44,5	0,50 12,7	9,69 246,1	8	0,88 22,4	11,75 298,5	26,7 12,1
10"	10,75 273	16,00 406,4	10,92 277,4	1,19 30,2	1,94 49,3	0,50 12,7	12,00 304,8	12	1,00 25,4	14,25 362,0	36,1 16,4
12"	12,75 323,8	19,00 482,6	12,92 328,2	1,25 31,8	2,19 55,6	0,50 12,7	14,38 365,3	12	1,00 25,4	17,00 431,8	57,5 26,1
14"	14,0 355,6	21,00 533,4	14,18 360,2	1,38 35,1	3,12 79,2	0,50 12,7	15,75 400,1	12	1,12 28,4	18,75 476,3	76,0 34,5
16"	16,0 406,4	23,50 596,9	16,19 411,2	1,44 36,6	3,44 87,4	0,50 12,7	18,00 457,2	16	1,12 28,4	21,25 539,8	98,2 44,6
18"	18,0 457,2	25,00 635,0	18,20 462,3	1,56 39,6	3,81 96,8	0,50 12,7	19,88 505,0	16	1,25 31,8	22,75 577,9	107 48,7
20"	20,0 508	27,50 698,5	20,25 514,4	1,69 42,9	4,06 103,1	0,50 12,7	22,00 558,8	20	1,25 31,8	25,00 635,0	136 61,6
24"	24,0 609,6	32,00 812,8	24,25 616,0	1,88 47,8	4,38 111,3	0,50 12,7	26,12 663,4	20	1,38 35,1	29,50 749,3	191 86,6

FLANGES DIMENTIONS

300 lb/sq. in.

Lap Joint Flanges

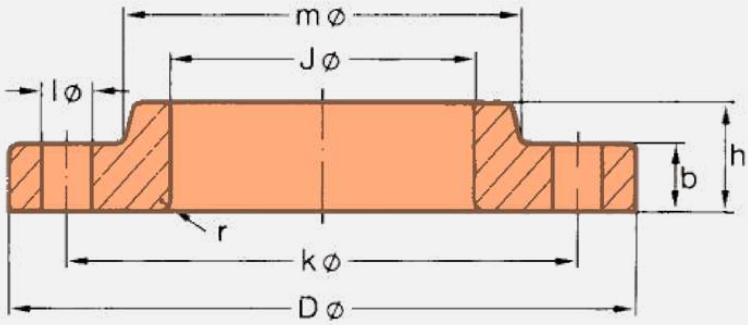

ASME B 16.5

Pipe		Flange					Hub	Drilling Template			Approx. Weight
Nom. Size	O D in. mm	D in. mm	J in. mm	b in. mm	h in. mm	r in. mm	m in. mm	Num-ber	l in. mm	k in. mm	≈ Pounds Kilo
1/2"	0,84 21,3	3,75 95,2	0,90 22,9	0,56 14,2	0,88 22,3	0,12 3,0	1,50 38,1	4	0,62 15,7	2,62 66,5	1,4 0,62
3/4"	1,05 26,7	4,62 117,3	1,11 28,2	0,62 15,7	1,00 25,4	0,12 3,0	1,88 47,7	4	0,75 19,0	3,25 82,5	2,4 1,10
1"	1,315 33,4	4,88 123,9	1,38 35	0,69 17,5	1,06 26,9	0,12 3,0	2,12 53,8	4	0,75 19,0	3,50 88,9	2,9 1,33
1 1/4"	1,66 42,2	5,25 133,3	1,72 43,7	0,75 19,0	1,06 26,9	0,19 4,8	2,50 63,5	4	0,75 19,0	3,88 98,5	3,6 1,65
1 1/2"	1,90 48,3	6,12 155,4	1,97 50,0	0,81 20,6	1,19 30,2	0,25 6,4	2,75 69,8	4	0,88 22,3	4,50 114,3	5,4 2,44
2"	2,375 60,3	6,50 165,1	2,46 62,5	0,88 22,3	1,31 33,2	0,31 7,8	3,31 84,0	8	0,75 19,0	5,00 127,0	6,2 2,83
2 1/2"	2,875 73,0	7,50 190,5	2,97 75,4	1,00 25,4	1,50 38,1	0,31 7,8	3,94 100,0	8	0,88 22,3	5,88 149,3	9,4 4,25
3"	3,50 88,9	8,25 209,5	3,60 91,4	1,12 28,4	1,69 42,9	0,38 9,6	4,62 117,3	8	0,88 22,3	6,62 168,1	12,7 5,78
3 1/2"	4,00 101,6	9,00 228,6	4,10 104,1	1,19 30,2	1,75 44,4	0,38 9,6	5,25 133,3	8	0,88 22,3	7,25 184,1	16,0 7,27
4"	4,50 114,3	10,00 254,0	4,60 116,8	1,25 31,7	1,88 47,7	0,44 11,1	5,75 146,0	8	0,88 22,3	7,88 200,1	21,0 9,55
5"	5,563 141,3	11,00 279,4	5,69 144,5	1,38 35,0	2,00 50,8	0,44 11,1	7,00 177,8	8	0,88 22,3	9,25 234,9	26,9 12,2
6"	6,625 168,3	12,50 317,5	6,75 171,4	1,44 36,5	2,06 52,3	0,50 12,7	8,12 206,2	12	0,88 22,3	10,62 269,7	34,1 15,5
8"	8,625 219,1	15,00 381,0	8,75 222,2	1,62 41,1	2,44 61,9	0,50 12,7	10,25 260,3	12	1,00 25,4	13,00 330,2	53,1 24,1
10"	10,75 273	17,50 444,5	10,92 277,4	1,88 47,7	3,75 95,2	0,50 12,7	12,62 320,5	16	1,12 28,4	15,25 387,3	75,8 34,4
12"	12,75 323,8	20,50 520,7	12,92 328,2	2,00 50,8	4,00 101,6	0,50 12,7	14,75 374,6	16	1,25 31,7	17,75 450,8	111 50,4
14"	14,0 355,6	23,00 584,2	14,18 360,2	2,12 53,8	4,38 111,2	0,50 12,7	16,75 425,4	20	1,25 31,7	20,25 514,3	156 70,9
16"	16,0 406,4	25,50 647,7	16,19 411,2	2,25 57,1	4,75 120,6	0,50 12,7	19,00 482,6	20	1,38 35,0	22,50 571,5	197 89,5
18"	18,0 457,2	28,00 711,2	18,20 462,3	2,38 60,4	5,12 130,0	0,50 12,7	21,00 533,4	24	1,38 35,0	24,75 628,6	245 111
20"	20,0 508	30,50 774,7	20,25 514,3	2,50 63,5	5,50 139,7	0,50 12,7	23,12 587,2	24	1,38 35,0	27,00 685,8	302 137
24"	24,0 609,6	36,00 914,4	24,25 615,9	2,75 69,8	6,00 152,4	0,50 12,7	27,62 701,5	24	1,62 41,1	32,00 812,8	449 204

FLANGES DIMENTIONS

600 lb/sq. in.

Lap Joint Flanges

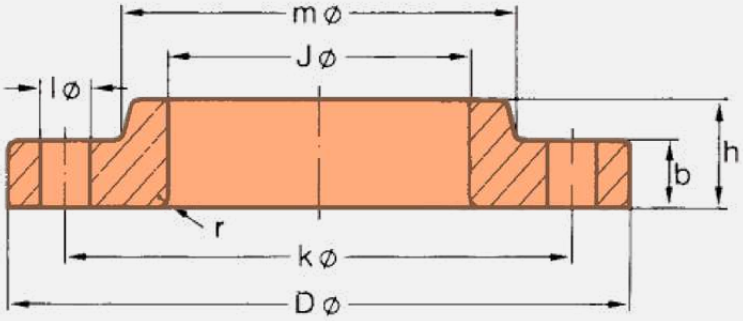

ASME B 16.5

Pipe		Flange					Hub	Drilling Template			Approx. Weight
Nom. Size	O D in. mm	D in. mm	J in. mm	b in. mm	h in. mm	r in. mm	m in. mm	Num-ber	l in. mm	k in. mm	≈ Pounds Kilo
1/2"	0,84 21,3	3,75 95,2	0,90 22,9	0,56 14,2	0,88 22,3	0,12 3,0	1,50 38,1	4	0,62 15,7	2,62 66,5	1,6 0,72
3/4"	1,05 26,7	4,62 117,3	1,11 28,2	0,62 15,7	1,00 25,4	0,12 3,0	1,88 47,8	4	0,75 19,1	3,25 82,6	2,8 1,25
1"	1,315 33,4	4,88 124,0	1,38 35,1	0,69 17,5	1,06 26,9	0,12 3,0	2,12 53,8	4	0,75 19,1	3,50 88,9	3,3 1,50
1 1/4"	1,66 42,2	5,25 133,4	1,72 43,7	0,81 20,6	1,12 28,4	0,19 4,8	2,50 63,5	4	0,75 19,1	3,88 98,6	4,4 2,00
1 1/2"	1,90 48,3	6,12 155,4	1,97 50,0	0,88 22,4	1,25 31,8	0,25 6,4	2,75 69,9	4	0,88 22,4	4,50 114,3	6,4 2,92
2"	2,375 60,3	6,50 165,1	2,46 62,5	1,00 25,4	1,44 36,6	0,31 7,9	3,31 84,1	8	0,75 19,1	5,00 127,0	7,8 3,55
2 1/2"	2,875 73,0	7,50 190,5	2,97 75,4	1,12 28,4	1,62 41,1	0,31 7,9	3,94 100,1	8	0,88 22,4	5,88 149,4	11,5 5,23
3"	3,50 88,9	8,25 209,6	3,60 91,4	1,25 31,8	1,81 46,0	0,38 9,7	4,62 117,3	8	0,88 22,4	6,62 168,1	15,3 6,95
3 1/2"	4,00 101,6	9,00 228,6	4,10 104,1	1,38 35,1	1,94 49,3	0,38 9,7	5,25 133,4	8	1,00 25,4	7,25 184,2	19,3 8,78
4"	4,50 114,3	10,75 273,1	4,60 116,8	1,50 38,1	2,12 53,8	0,44 11,2	6,00 152,4	8	1,00 25,4	8,50 215,9	31,7 14,4
5"	5,563 141,3	13,00 330,2	5,69 144,5	1,75 44,5	2,38 60,5	0,44 11,2	7,44 189,0	8	1,12 28,4	10,50 266,7	53,5 24,3
6"	6,625 168,3	14,00 355,6	6,75 171,5	1,88 47,8	2,62 66,5	0,50 12,7	8,75 222,3	12	1,12 28,4	11,50 292,1	62,8 28,5
8"	8,625 219,1	16,50 419,1	8,75 222,3	2,19 55,6	3,00 76,2	0,50 12,7	10,75 273,1	12	1,25 31,8	13,75 349,3	94,9 43,1
10"	10,75 273	20,00 508,0	10,92 277,4	2,50 63,5	4,38 111,3	0,50 12,7	13,50 342,9	16	1,38 35,1	17,00 431,8	155 70,5
12"	12,75 323,8	22,00 558,8	12,92 328,2	2,62 66,5	4,62 117,3	0,50 12,7	15,75 400,1	20	1,38 35,1	19,25 489,0	190 86,1
14"	14,0 355,6	23,75 603,3	14,18 360,2	2,75 69,9	5,00 127,0	0,50 12,7	17,00 431,8	20	1,50 38,1	20,75 527,1	220 100
16"	16,0 406,4	27,00 685,8	16,19 411,2	3,00 76,2	5,50 139,7	0,50 12,7	19,50 495,3	20	1,62 41,1	23,75 603,3	319 145
18"	18,0 457,2	29,25 743,0	18,20 462,3	3,25 82,6	6,00 152,4	0,50 12,7	21,50 546,1	20	1,75 44,5	25,75 654,1	390 177
20"	20,0 508	32,00 812,8	20,25 514,4	3,50 88,9	6,50 165,1	0,50 12,7	24,00 609,6	24	1,75 44,5	28,50 723,9	496 225
24"	24,0 609,6	37,00 939,8	24,25 616,0	4,00 101,6	7,25 184,2	0,50 12,7	28,25 717,6	24	2,00 50,8	33,00 838,2	700 318

FLANGES DIMENTIONS

150 lb/sq. in.

Blind Flanges

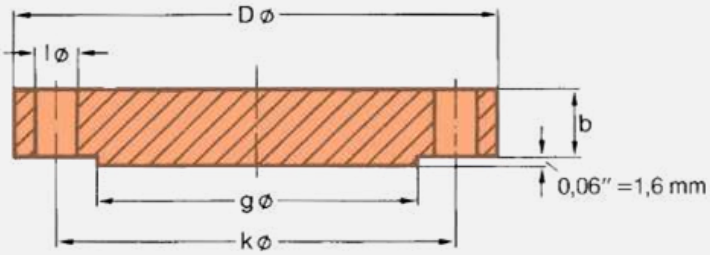

ASME B 16.5

Pipe		Flange		Raised Face	Drilling Template			Approx. Weight
Nominal Size	O D in. mm	D in. mm	b in. mm	g in. mm	Number	l in. mm	k in. mm	≈ Pounds Kilo
1/2"	0,84 21,3	3,50 88,9	0,44 11,2	1,38 35,1	4	0,62 15,7	2,38 60,5	0,9 0,42
3/4"	1,05 26,7	3,88 98,6	0,50 12,7	1,69 42,9	4	0,62 15,7	2,75 69,9	1,3 0,61
1"	1,315 33,4	4,25 108,0	0,56 14,2	2,00 50,8	4	0,62 15,7	3,12 79,2	1,9 0,86
1 1/4"	1,66 42,2	4,62 117,3	0,62 15,7	2,50 63,5	4	0,62 15,7	3,50 88,9	2,6 1,17
1 1/2"	1,90 48,3	5,00 127,0	0,69 17,5	2,88 73,2	4	0,62 15,7	3,88 98,6	3,4 1,53
2"	2,375 60,3	6,00 152,4	0,75 19,1	3,62 91,9	4	0,75 19,1	4,75 120,7	5,3 2,42
2 1/2"	2,875 73,0	7,00 177,8	0,88 22,4	4,12 104,6	4	0,75 19,1	5,50 139,7	8,7 3,94
3"	3,50 88,9	7,50 190,5	0,94 23,9	5,00 127,0	4	0,75 19,1	6,00 152,4	10,9 4,93
3 1/2"	4,00 101,6	8,50 215,9	0,94 23,9	5,50 139,7	8	0,75 19,1	7,00 177,8	13,6 6,17
4"	4,50 114,3	9,00 228,6	0,94 23,9	6,19 157,2	8	0,75 19,1	7,50 190,5	15,4 7,00
5"	5,563 141,3	10,00 254,0	0,94 23,9	7,31 185,7	8	0,88 22,4	8,50 215,9	19,0 8,63
6"	6,625 168,3	11,00 279,4	1,00 25,4	8,50 215,9	8	0,88 22,4	9,50 241,3	24,9 11,3
8"	8,625 219,1	13,50 342,9	1,12 28,4	10,62 269,7	8	0,88 22,4	11,75 298,5	43,2 19,6
10"	10,75 273	16,00 406,4	1,19 30,2	12,75 323,9	12	1,00 25,4	14,25 362,0	63,4 28,8
12"	12,75 323,8	19,00 482,6	1,25 31,8	15,00 381,0	12	1,00 25,4	17,00 431,8	95,2 43,2
14"	14,0 355,6	21,00 533,4	1,38 35,1	16,25 412,8	12	1,12 28,4	18,75 476,3	128 58,1
16"	16,0 406,4	23,50 596,9	1,44 36,6	18,50 469,9	16	1,12 28,4	21,25 539,8	167 76,0
18"	18,0 457,2	25,00 635,0	1,56 39,6	21,00 533,4	16	1,25 31,8	22,75 577,9	206 93,7
20"	20,0 508	27,50 698,5	1,69 42,9	23,00 584,2	20	1,25 31,8	25,00 635,0	269 122
24"	24,0 609,6	32,00 812,8	1,88 47,8	27,25 692,2	20	1,38 35,1	29,50 749,3	408 185

FLANGES DIMENTIONS

300 lb/sq. in.

Blind Flanges

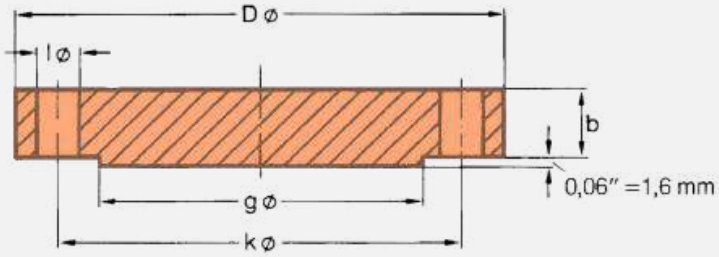

ASME B 16.5

Pipe		Flange		Raised Face	Drilling Template			Approx. Weight
Nominal Size	O D in. mm	D in. mm	b in. mm	g in. mm	Number	l in. mm	k in. mm	≈ Pounds Kilo
1/2"	0,84 21,3	3,75 95,2	0,56 14,2	1,38 35,0	4	0,62 15,7	2,62 66,5	1,4 0,64
3/4"	1,05 26,7	4,62 117,3	0,62 15,7	1,69 42,9	4	0,75 19,0	3,25 82,5	2,4 1,11
1"	1,315 33,4	4,88 123,9	0,69 17,5	2,00 50,8	4	0,75 19,0	3,50 88,9	3,1 1,39
1 1/4"	1,66 42,2	5,25 133,3	0,75 19,0	2,50 63,5	4	0,75 19,0	3,88 98,5	3,9 1,79
1 1/2"	1,90 48,3	6,12 155,4	0,81 20,6	2,88 73,1	4	0,88 22,3	4,50 114,3	5,9 2,66
2"	2,375 60,3	6,50 165,1	0,88 22,3	3,62 91,9	8	0,75 19,0	5,00 127,0	7,0 3,18
2 1/2"	2,875 73,0	7,50 190,5	1,00 25,4	4,12 104,6	8	0,88 22,3	5,88 149,3	10,7 4,85
3"	3,50 88,9	8,25 209,5	1,12 28,4	5,00 127,0	8	0,88 22,3	6,62 168,1	15,0 6,81
3 1/2"	4,00 101,6	9,00 228,6	1,19 30,2	5,50 139,7	8	0,88 22,3	7,25 184,1	19,2 8,71
4"	4,50 114,3	10,00 254,0	1,25 31,7	6,19 157,2	8	0,88 22,3	7,88 200,1	25,3 11,5
5"	5,563 141,3	11,00 279,4	1,38 35,0	7,31 185,6	8	0,88 22,3	9,25 234,9	34,4 15,6
6"	6,625 168,3	12,50 317,5	1,44 36,5	8,50 215,9	12	0,88 22,3	10,62 269,7	46,0 20,9
8"	8,625 219,1	15,00 381,0	1,62 41,1	10,62 269,7	12	1,00 25,4	13,00 330,2	75,6 34,3
10"	10,75 273	17,50 444,5	1,88 47,7	12,75 323,8	16	1,12 28,4	15,25 387,3	117 53,3
12"	12,75 323,8	20,50 520,7	2,00 50,8	15,00 381,0	16	1,25 31,7	17,75 450,8	174 78,8
14"	14,0 355,6	23,00 584,2	2,12 53,8	16,25 412,7	20	1,25 31,7	20,25 514,3	231 105
16"	16,0 406,4	25,50 647,7	2,25 57,1	18,50 469,9	20	1,38 35,0	22,50 571,5	302 137
18"	18,0 457,2	28,00 711,2	2,38 60,4	21,00 533,4	24	1,38 35,0	24,75 628,6	386 175
20"	20,0 508	30,50 774,7	2,50 63,5	23,00 584,2	24	1,38 35,0	27,00 685,8	487 221
24"	24,0 609,6	36,00 914,4	2,75 69,8	27,25 692,1	24	1,62 41,1	32,00 812,8	747 339

FLANGES DIMENTIONS

600 lb/sq. in.

Blind Flanges

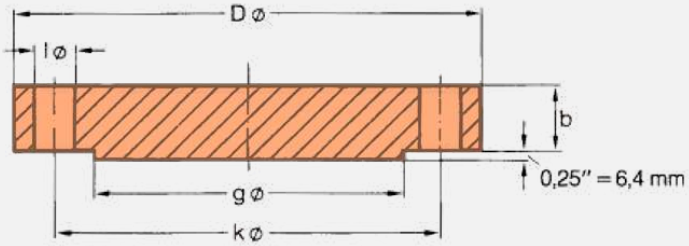

ASME B 16.5

Pipe		Flange		Raised Face	Drilling Template			Approx. Weight
Nominal Size	O D in. mm	D in. mm	b in. mm	g in. mm	Number	l in. mm	k in. mm	≈ Pounds Kilo
1/2"	0,84 21,3	3,75 95,3	0,56 14,2	1,38 35,1	4	0,62 15,7	2,62 66,5	1,7 0,76
3/4"	1,05 26,7	4,62 117,3	0,62 15,7	1,69 42,9	4	0,75 19,1	3,25 82,6	2,8 1,28
1"	1,315 33,4	4,88 124	0,69 17,5	2,00 50,8	4	0,75 19,1	3,50 88,9	3,5 1,60
1 1/4"	1,66 42,2	5,25 133,4	0,81 20,6	2,50 63,5	4	0,75 19,1	3,88 98,6	4,9 2,23
1 1/2"	1,90 48,3	6,12 155,4	0,88 22,4	2,88 73,2	4	0,88 22,4	4,50 114,3	7,2 3,25
2"	2,375 60,3	6,50 165,1	1,00 25,4	3,62 91,9	8	0,75 19,1	5,00 127,0	9,1 4,15
2 1/2"	2,875 73,0	7,50 190,5	1,12 28,4	4,12 104,6	8	0,88 22,4	5,88 149,4	13,5 6,13
3"	3,50 88,9	8,25 209,6	1,25 31,8	5,00 127,0	8	0,88 22,4	6,62 168,1	18,6 8,44
3 1/2"	4,00 101,6	9,00 228,6	1,38 35,1	5,50 139,7	8	1,00 25,4	7,25 184,2	24,2 11,0
4"	4,50 114,3	10,75 273,1	1,50 38,1	6,19 157,2	8	1,00 25,4	8,50 215,9	38,1 17,3
5"	5,563 141,3	13,00 330,2	1,75 44,5	7,31 185,7	8	1,12 28,4	10,50 266,7	64,8 29,4
6"	6,625 168,3	14,00 355,6	1,88 47,8	8,50 215,9	12	1,12 28,4	11,50 292,1	79,5 36,1
8"	8,625 219,1	16,50 419,1	2,19 55,6	10,62 269,7	12	1,25 31,8	13,75 349,3	130 58,9
10"	10,75 273	20,00 508,0	2,50 63,5	12,75 323,9	16	1,38 35,1	17,00 431,8	215 97,5
12"	12,75 323,8	22,00 558,8	2,62 66,5	15,00 381,0	20	1,38 35,1	19,25 489,0	273 124
14"	14,0 355,6	23,75 603,3	2,75 69,9	16,25 412,8	20	1,50 38,1	20,75 527,1	333 151
16"	16,0 406,4	27,00 685,8	3,00 76,2	18,50 469,9	20	1,62 41,1	23,75 603,3	471 214
18"	18,0 457,2	29,25 743,0	3,25 82,6	21,00 533,4	20	1,75 44,5	25,75 654,1	599 272
20"	20,0 508	32,00 812,8	3,50 88,9	23,00 584,2	24	1,75 44,5	28,50 723,9	769 349
24"	24,0 609,6	37,00 939,8	4,00 101,6	27,25 692,2	24	2,00 50,8	33,00 838,2	1174 533

FLANGES DIMENTIONS

150 lb/sq. in.

Socket Welding Flanges

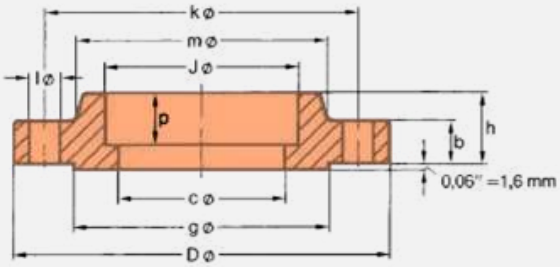

ASME B 16.5

Pipe		Flange						Hub	Raised Face	Drilling Template			Approx. Weight
Nom. Size	O D in. mm	D in. mm	J in. mm	c in. mm	p in. mm	b in. mm	h in. mm	m in. mm	g in. mm	Num-ber	l in. mm	k in. mm	≈ Pounds Kilo
1/2"	0,84 21,3	3,50 88,9	0,88 22,4	0,62 15,7	0,38 9,7	0,44 11,2	0,62 15,7	1,19 30,2	1,38 35,1	4	0,62 15,7	2,38 60,5	0,9 0,42
3/4"	1,05 26,7	3,88 98,6	1,09 27,7	0,82 20,8	0,44 11,2	0,50 12,7	0,62 15,7	1,50 38,1	1,69 42,9	4	0,62 15,7	2,75 69,9	1,3 0,59
1"	1,315 33,4	4,25 108,0	1,36 34,5	1,05 26,7	0,50 12,7	0,56 14,2	0,69 17,5	1,94 49,3	2,00 50,8	4	0,62 15,7	3,12 79,2	1,8 0,81
1 1/4"	1,66 42,2	4,62 117,3	1,70 43,2	1,38 35,1	0,56 14,2	0,62 15,7	0,81 20,6	2,31 58,7	2,50 63,5	4	0,62 15,7	3,50 88,9	2,4 1,07
1 1/2"	1,90 48,3	5,00 127,0	1,95 49,5	1,61 40,9	0,62 15,7	0,69 17,5	0,88 22,4	2,56 65,0	2,88 73,2	4	0,62 15,7	3,88 98,6	3,00 1,36
2"	2,375 60,3	6,00 152,4	2,44 62,0	2,07 52,6	0,69 17,5	0,75 19,1	1,00 25,4	3,06 77,7	3,62 91,9	4	0,75 19,1	4,75 120,7	4,6 2,10
2 1/2"	2,875 73,0	7,00 177,8	2,94 74,7	2,47 62,7	0,75 19,1	0,88 22,4	1,12 28,4	3,56 90,4	4,12 104,6	4	0,75 19,1	5,50 139,7	7,3 3,33
3"	3,50 88,9	7,50 190,5	3,57 90,7	3,07 78,0	0,81 20,6	0,94 23,9	1,19 30,2	4,25 108,0	5,00 127,0	4	0,75 19,1	6,00 152,4	8,6 3,90

300 lb/sq. in.

Socket Welding Flanges

ASME B 16.5

Pipe		Flange						Hub	Raised Face	Drilling Template			Approx. Weight
Nom. Size	O D in. mm	D in. mm	J in. mm	c in. mm	p in. mm	b in. mm	h in. mm	m in. mm	g in. mm	Num-ber	l in. mm	k in. mm	≈ Pounds Kilo
1/2"	0,84 21,3	3,75 95,2	0,88 22,3	0,62 15,7	0,38 9,6	0,56 14,2	0,88 22,3	1,50 38,1	1,38 35,0	4	0,62 15,7	2,62 66,5	1,5 0,66
3/4"	1,05 26,7	4,62 117,3	1,09 27,7	0,82 20,8	0,44 11,1	0,62 15,7	1,00 25,4	1,88 47,7	1,69 42,9	4	0,75 19,0	3,25 82,5	2,5 1,15
1"	1,315 33,4	4,88 123,9	1,36 34,5	1,05 26,7	0,50 12,7	0,69 17,5	1,06 26,9	2,12 53,8	2,00 50,8	4	0,75 19,0	3,50 88,9	3,1 1,40
1 1/4"	1,66 42,2	5,25 133,3	1,70 43,2	1,38 35,0	0,56 14,2	0,75 19,0	1,06 26,9	2,50 63,5	2,50 63,5	4	0,75 19,0	3,88 98,5	3,9 1,75
1 1/2"	1,90 48,3	6,12 155,4	1,95 49,5	1,61 40,9	0,62 15,7	0,81 20,6	1,19 30,2	2,75 69,8	2,88 73,1	4	0,88 22,3	4,50 114,3	5,6 2,55
2"	2,375 60,3	6,50 165,1	2,44 62,0	2,07 52,6	0,69 17,5	0,88 22,3	1,31 33,2	3,31 84,0	3,62 91,9	8	0,75 19,0	5,00 127,0	6,5 2,93
2 1/2"	2,875 73,0	7,50 190,5	2,94 74,7	2,47 62,7	0,75 19,0	1,00 25,4	1,50 38,1	3,94 100,0	4,12 104,6	8	0,88 22,3	5,88 149,3	9,7 4,40
3"	3,50 88,9	8,25 209,5	3,57 90,7	3,07 78,0	0,81 20,5	1,12 28,4	1,69 42,9	4,62 117,3	5,00 127,0	8	0,88 22,3	6,62 168,1	13,0 5,92

FLANGES DIMENTIONS

150 lb/sq. in.

Threaded Flanges

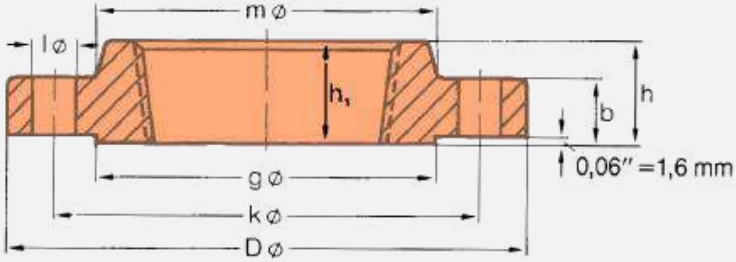

Thread type: Standard taper pipe thread to ANSI B 2.1

ASME B 16.5

Pipe		Flange				Hub	Raised Face	Drilling Template			Approx. Weight
Nom. Size	O D in. mm	D in. mm	J in. mm	b in. mm	h/h₁ in. mm	m in. mm	g in. mm	Num-ber	l in. mm	k in. mm	= Pounds Kilo
1/2"	0,84 21,3	3,50 88,9	No Counter Bore Required on 150 lb Threaded Flanges	0,44 11,2	0,62 15,7	1,19 30,2	1,38 35,1	4	0,62 15,7	2,38 60,5	0,9 0,39
3/4"	1,05 26,7	3,88 98,6		0,50 12,7	0,62 15,7	1,50 38,1	1,69 42,9	4	0,62 15,7	2,75 69,9	1,2 0,56
1"	1,315 33,4	4,25 108,0		0,56 14,2	0,69 17,5	1,94 49,3	2,00 50,8	4	0,62 15,7	3,12 79,2	1,7 0,78
1 1/4"	1,66 42,2	4,62 117,3		0,62 15,7	0,81 20,6	2,31 58,7	2,50 63,5	4	0,62 15,7	3,50 88,9	2,3 1,03
1 1/2"	1,90 48,3	5,00 127,0		0,69 17,5	0,88 22,4	2,56 65,0	2,88 73,2	4	0,62 15,7	3,88 98,6	2,9 1,32
2"	2,375 60,3	6,00 152,4		0,75 19,1	1,00 25,4	3,06 77,7	3,62 91,9	4	0,75 19,1	4,75 120,7	4,5 2,06
2 1/2"	2,875 73,0	7,00 177,8		0,88 22,4	1,12 28,4	3,56 90,4	4,12 104,6	4	0,75 19,1	5,50 139,7	7,2 3,28
3"	3,50 88,9	7,50 190,5		0,94 23,9	1,19 30,2	4,25 108,0	5,00 127,0	4	0,75 19,1	6,00 152,4	8,5 3,85
3 1/2"	4,00 101,6	8,50 215,9		0,94 23,9	1,25 31,8	4,81 122,2	5,50 139,7	8	0,75 19,1	7,00 177,8	10,6 4,81
4"	4,50 114,3	9,00 228,6		0,94 23,9	1,31 33,3	5,31 134,9	6,19 157,2	8	0,75 19,1	7,50 190,5	11,7 5,30
5"	5,563 141,3	10,00 254,0		0,94 23,9	1,44 36,6	6,44 163,6	7,31 185,7	8	0,88 22,4	8,50 215,9	13,4 6,07
6"	6,625 168,3	11,00 279,4		1,00 25,4	1,56 39,6	7,56 192,0	8,50 215,9	8	0,88 22,4	9,50 241,3	16,4 7,45
8"	8,625 219,1	13,50 342,9		1,12 28,4	1,75 44,5	9,69 246,1	10,62 269,7	8	0,88 22,4	11,75 298,5	26,7 12,1
10"	10,75 273	16,00 406,4		1,19 30,2	1,94 49,3	12,00 304,8	12,75 323,9	12	1,00 25,4	14,25 362,0	36,3 16,5
12"	12,75 323,8	19,00 482,6		1,25 31,8	2,19 55,6	14,38 365,3	15,00 381,0	12	1,00 25,4	17,00 431,8	57,7 26,2
14"	14,0 355,6	21,00 533,4		1,38 35,1	2,25 57,2	15,75 400,1	16,25 412,8	12	1,12 28,4	18,75 476,3	76,2 34,6
16"	16,0 406,4	23,50 596,9		1,44 36,6	2,50 63,5	18,00 457,2	18,50 469,9	16	1,12 28,4	21,25 539,8	98,7 44,8
18"	18,0 457,2	25,00 635,0		1,56 39,6	2,69 68,3	19,88 505,0	21,00 533,4	16	1,25 31,8	22,75 577,9	108 48,9
20"	20,0 508	27,50 698,5		1,69 42,9	2,88 73,2	22,00 558,8	23,00 584,2	20	1,25 31,8	25,00 635,0	136 61,9
24"	24,0 609,6	32,00 812,8		1,88 47,8	3,25 82,6	26,12 663,4	27,25 692,2	20	1,38 35,1	29,50 749,3	191 86,9

Armoduro®

FLANGES DIMENTIONS

300 lb/sq. in.

Threaded Flanges

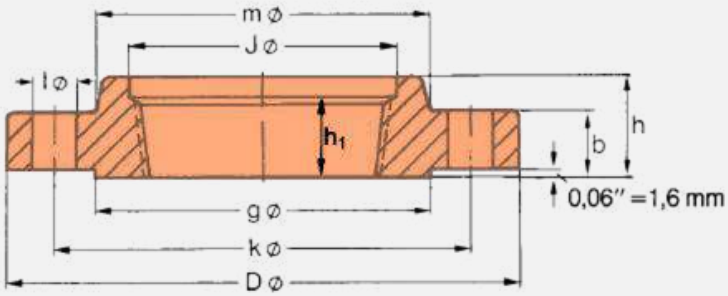

Thread type: Standard taper pipe thread to ANSI B 2.1

ASME B 16.5

Pipe		Flange					Hub	Raised Face	Drilling Template			Approx. Weight
Nom. Size	O D in. mm	D in. mm	J in. mm	b in. mm	h in. mm	h_1 in. mm	m in. mm	g in. mm	Num-ber	l in. mm	k in. mm	= Pounds Kilo
1/2"	0,84 21,3	3,75 95,2	0,93 23,6	0,56 14,2	0,88 22,3	0,62 15,7	1,50 38,1	1,38 35,0	4	0,62 15,7	2,62 66,5	1,4 0,64
3/4"	1,05 26,7	4,62 117,3	1,14 29,0	0,62 15,7	1,00 25,4	0,62 15,7	1,88 47,7	1,69 42,9	4	0,75 19,0	3,25 82,5	2,5 1,12
1"	1,315 33,4	4,88 123,9	1,41 35,8	0,69 17,5	1,06 26,9	0,69 17,5	2,12 53,8	2,00 50,8	4	0,75 19,0	3,50 88,9	3,0 1,36
1 1/4"	1,66 42,2	5,25 133,3	1,75 44,4	0,75 19,0	1,06 26,9	0,81 20,5	2,50 63,5	2,50 63,5	4	0,75 19,0	3,88 98,5	3,7 1,68
1 1/2"	1,90 48,3	6,12 155,4	1,99 50,5	0,81 20,6	1,19 30,2	0,88 22,3	2,75 69,8	2,88 73,1	4	0,88 22,3	4,50 114,3	5,5 2,49
2"	2,375 60,3	6,50 165,1	2,50 63,5	0,88 22,3	1,31 33,2	1,12 28,4	3,31 84,0	3,62 91,9	8	0,75 19,0	5,00 127,0	6,3 2,87
2 1/2"	2,875 73,0	7,50 190,5	3,00 76,2	1,00 25,4	1,50 38,1	1,25 31,7	3,94 100,0	4,12 104,6	8	0,88 22,3	5,88 149,3	9,5 4,32
3"	3,50 88,9	8,25 209,5	3,63 92,2	1,12 28,4	1,69 42,9	1,25 31,7	4,62 117,3	5,00 127,0	8	0,88 22,3	6,62 168,1	12,9 5,85
3 1/2"	4,00 101,6	9,00 228,6	4,13 104,9	1,19 30,2	1,75 44,4	1,44 36,5	5,25 133,3	5,50 139,7	8	0,88 22,3	7,25 184,1	16,2 7,34
4"	4,50 114,3	10,00 254,0	4,63 117,6	1,25 31,7	1,88 47,7	1,44 36,5	5,75 146,0	6,19 157,2	8	0,88 22,3	7,88 200,1	21,2 9,61
5"	5,563 141,3	11,00 279,4	5,69 144,5	1,38 35,0	2,00 50,8	1,69 42,9	7,00 177,8	7,31 185,6	8	0,88 22,3	9,25 234,9	27,1 12,3
6"	6,625 168,3	12,50 317,5	6,75 171,4	1,44 36,5	2,06 52,3	1,81 45,9	8,12 206,2	8,50 215,9	12	0,88 22,3	10,62 269,7	34,4 15,6
8"	8,625 219,1	15,00 381,0	8,75 222,2	1,62 41,1	2,44 61,9	2,00 50,8	10,25 260,3	10,62 269,7	12	1,00 25,4	13,00 330,2	53,3 24,2
10"	10,75 273	17,50 444,5	10,88 276,3	1,88 47,7	2,62 66,5	2,19 55,6	12,62 320,5	12,75 323,8	16	1,12 28,4	15,25 387, 3	75,1 34,1
12"	12,75 323,8	20,50 520,7	12,94 328,7	2,00 50,8	2,88 73,1	2,38 60,4	14,75 374,6	15,00 381,0	16	1,25 31,7	17,75 450,8	110 49,8
14"	14,0 355,6	23,00 584,2	14,19 360,4	2,12 53,8	3,00 76,2	2,50 63,5	16,75 425,4	16,25 412,7	20	1,25 31,7	20,25 514,3	154 69,9
16"	16,0 406,4	25,50 647,7	16,19 411,2	2,25 57,1	3,25 82,5	2,69 68,3	19,00 482,6	18,50 469,9	20	1,38 35,0	22,50 571,5	194 88,1
18"	18,0 457,2	28,00 711,2	18,19 462	2,38 60,4	3,50 88,9	2,75 69,8	21,00 533,4	21,00 533,4	24	1,38 35,0	24,75 628,6	240 109
20"	20,0 508	30,50 774,7	20,19 512,8	2,50 63,5	3,75 95,2	2,88 73,1	23,12 587,2	23,00 584,2	24	1,38 35,0	27,00 685,8	295 134
24"	24,0 609,6	36,00 914,4	24,19 614,4	2,75 69,8	4,19 106,4	3,25 82,5	27,62 701,2	27,25 692,2	24	1,62 41,1	32,00 812,8	443 201

Armoduro®

British Standard 3293

Welding Neck and Slip-on Flanges acc. to B. S. 3293

Nominal Sizes larger than 24"

BRITISH STANDARD 3293, issue 1960 is a specification for carbon steel pipe flanges for the petroluem industry.

General Survey

Nominal Pressure lb/sq. in kp/cm² N/cm²	150 10,6 104	300 21,1 207	400 28,1 276	600 42,2 414
Type of flange	from 26" to max. Nominal Sizes			
Welding Neck Flanges	48"	36"	36"	36"
Same Ring Joint Type	-	36"	36"	36"
Slip-on Flanges	48"	36"	36"	36"
Same Ring Joint Type	-	36"	36"	36"

Facings and Dimensional Tolerances acc. to ASME B 16.5 except Lenght »h» at Slip-on Flanges = ± 0,125"
± 3,2 mm

Welding Ends

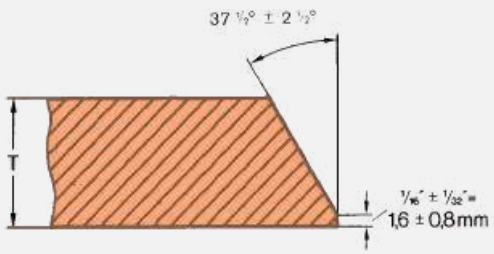

Recommended Bevel for Wall Thicknesses (T) at End of Flange ¾" or less.

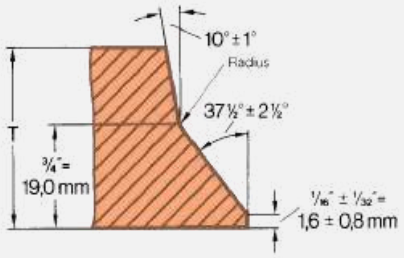

Recommended Bevel for Wall Thicknesses (T) at End of Flange, greater than ¾".

FORGED FITTINGS

At **ARMODURO®**, we specialize in producing high pressure forged fittings that are designed to meet the most demanding requirements of various industries. Our fittings are manufactured through some of the most reputable mills worldwide and are tested to ensure exceptional quality and performance under extreme conditions.

Manufacturing Standards	:	ASTM, ASME, ANSI, MSS
Fitting Types	:	90 Degree Elbow / 45 Degree Elbow / Equal & Reducing Tee / Full & Reducing coupling / Bushes / Plugs / Caps / Crosses / Unions
Dimensions	:	ANSI B16.11 / BS 3799 / B1.20.1 / ISO 7-1 / MSS SP 97 / MSS SP 83 / MSS SP 95
End Connection	:	NPT / Socket Weld / BSPT
Pressure Ratings	:	3000LBS / 6000LBS / 9000LBS
Size Range	:	1/8” to 4”

GRADES:

Stainless Steel	:	A182- F304/L, F316/L, F321
Carbon Steel	:	A105, A350 LF2
Duplex & Super Duplex	:	F51, F53, F55, F60, F61
Nickel & High Temperature	:	F310, F904L, UNS N08825, UNS N06625, UNS N08020, Titanium Gr2

FORGED FITTINGS TYPES

90° ELBOW

1/8” to 4” class 2000 threaded
1/8” to 4” class 3000 threaded & socket weld
1/8” to 4” class 6000 threaded
1/8” to 4” class 6000 socket weld
1/2” to 2” class 9000 socket weld

TEE

1/8” to 4” class 2000 threaded
1/8” to 4” class 3000 threaded & socket weld
1/8” to 4” class 6000 threaded
1/8” to 4” class 6000 socket weld
1/2” to 2” class 9000 socket weld

45° ELBOW

1/8” to 4” class 2000 threaded
1/8” to 4” class 3000 threaded & socket weld
1/8” to 4” class 6000 threaded
1/8” to 4” class 6000 socket weld
1/2” to 2” class 9000 socket weld

LATERAL

1/4” to 2” class 3000 threaded
1/4” to 2” class 3000 socket weld
3/8” to 1 1/2” class 6000 threaded
1/2” to 2” class 6000 socket weld
1/2” to 1 1/2” class 9000

STREET ELBOW

1/8” to 2” class 3000 threaded
1/4”to1 1/2”class 6000 threaded

FORGED FITTINGS TYPES

REDUCING TEE

3/4” to 2” class 3000 & 6000 socket weld
1/2” to 1 1 12” class 9000 socket weld
1/2” to 2” class 3000 threaded
1/2” to 1 1/2” class 6000 threaded
2” to 4” STD/XS butt weld threaded
2” to 4” STD/XS butt weld

CROSS

1/8” to 4” class 2000, 3000 & 6000 threaded
1/8” to 4” class 3000 socket weld
1/8” to 4” class 6000 socket weld
1/2” to 2” class 9000 socket weld

SWAGE NIPPLE

Concentric & Eccentric
PBE, TBE & BBE
SCH 5s to SCH 160
1/4” x 1/8” to 4” x 3 1/2” class 2000, 3000 & 6000

UNION

Threaded (M/F) & Socket Weld
1/4” to 3” class 3000 & 6000
MSS-SP-83, Rockwood & Lug Nut types

O-LETS:

Weldolet, Elbolet, Socketolet,
Sweepolet, Threadolet, Latraolet,
Nipolet

1/8” to 4” class 3000, 6000
Threaded, welded, SW, BW

Armoduro®

FORGED FITTINGS TYPES

PLUGS & BUSHINGS:

ROUND HEAD PLUG

1/8” to 4” nominal pipe sizes

HEXAGON PLUG

1/8” to 4” nominal pipe sizes

SQUARE HEAD PLUG

1/8” to 4” nominal pipe sizes

HEXAGON BUSHING

1/8” to 4” nominal pipe sizes

FLUSH BUSHING

1/8” to 4” nominal pipe sizes

REDUCER INSERTS

Socket weld reducer inserts available in class 3000, 6000 and 9000. Inserts stocked in various materials. Consult factory for special applications.

TYPE 1

Nominal pipe sizes from
1/4” x 1/8” to 2” x 1/2”

TYPE 2

Nominal pipe sizes from
1/2” x 1/4” to 2” x 1/4”

COUPLINGS, REDUCERS & CAPS

PIPE CAP

1/8” to 4” class 3000
1/8” to 2” class 6000
threaded & socket welds

HALF COUPLING

1/8” to 4” class 3000 & 6000
threaded & socket weld
1/2” to 2” class 9000 socket
weld only

COUPLING

1 /8” to 4” class 3000 & 6000
threaded & socket weld
1/2” to 2” class 9000 socket
weld only

REDUCER

1/8” to 4” class 3000 & 6000
threaded & socket weld
1/2” to 2” class 9000 socket
weld only

INTERNATIONAL
STANDARDS WE FOLLOW

API
AMERICAN PETROLEUM INSTITUTE

ASTM
ASTM INTERNATIONAL

ISO

ASME
SETTING THE STANDARD

EN
EUROPEAN STANDARDS

DIN

ANSI
American National Standards Institute

Armoduro®

A BRAND
YOU CAN TRUST

WWW.ARMODURO.COM

SALES@ARMODURO.COM

+966 138 341 617